This presentation is a commercial offer for the sale of a **new invention – Tsentsyper's key joint**

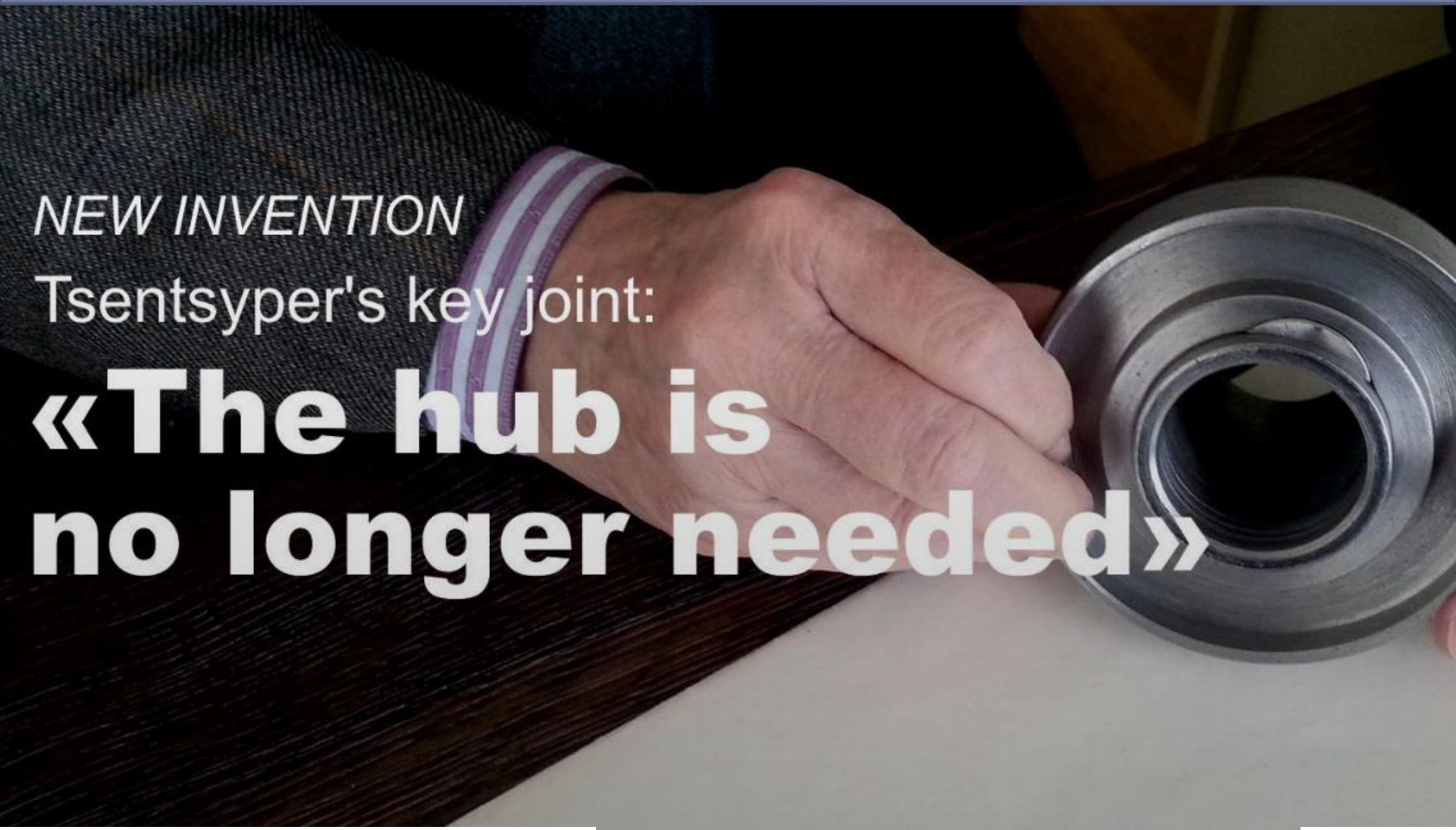

tsentsypers-key-joint.web4ed.org

Tsentsyper's key joint

ABOUT INVENTION

The invention relates to the field of mechanical engineering, namely, to key joints that are widely used in engineering. The key joints are the detachable joints of the **external member** (gear wheel, sheave, sleeve pipe, balance wheel, hub, cam, etc.) and **internal member** (axis, shaft) for the torque transmission using a typical part of the key machine.

Photo Gallery of the Invention

Step 1

Step 2

Step 3

Step 4

Step 5

Step 6

Look at the photo gallery on the site:
tsentsypers-key-joint.web4ed.org

7 Disadvantages of the existing usual key joint

7 DISADVANTAGES OF THE EXISTING USUAL KEY JOINT

1. As rule, the required **hub length of the** external member (gear, wheel, coupling, band wheel, cam and so on) **is defined by effective length of the key**, determined on the shaft.
2. Reaming edge of usaul key undergo **shearing, bending and buckling strains.**
3. The presence of the key seat on the shaft significantly **reduce the section of the shaft**. It is well known that during torsion calculation the shaft diameter, depending on its size, should be increased **by 8 to 12%**. It increases the metal content of the shaft. This deficiency is typical especially with strength calculation of the **hollow shaft**.
4. Key seats on the shaft and in the external member are **stress concentrations**.
5. With activating of the fixed key joint (torque transmission) and with its stop, it raises **a shock load at the key joint and at the key seat**. For flexible joints, when usual key migrates with the shaft or for example, the gear, a **shock loads** in mating parts are also inevitable. It arises because of the availability of free distance between the key and the gear key seat (or conversely when the key is attached to the gear and the external member moves along the key seat on the shaft).
6. In general, **for the manufacture** of key joint **it is required a strict tolerance of the parallelism of the shaft axis with key seat axis in it and key seat axis in the** external member. It is particularly complicated for the long key seats and required a high processing accuracy.
7. **Manufacture** of key, key seat on the shaft and in the external member as key joint **making** in the system of "fits and tolerances" comes **with linear dimensions.**

Read more:
tsentsypers-key-joint.web4ed.org

COMPARATIVE STUDY OF THE KEY JOINT STRESS-STRAIN STATE

COMPARISON OF THE "TSENTSYPER'S KEY JOINT" AND USUAL KEY JOINT WITH PRISMATIC KEY

Comparative calculations performed by the finite elements method, as well as the developed method of key joint strength calculation and geometric construction led to the following conclusions.

Note. *Other things being equal: the same shaft diameter, the size of external member; consequently, the same materials are separately for the shaft, for the key and for the external member.*

Presentations of Comparison Results

COMPARATIVE STUDY OF THE KEY JOINT STRESS-STRAIN STATE:

Continuous shaft and Hollow shaft

Read more:
tsentsypers-key-joint.web4ed.org

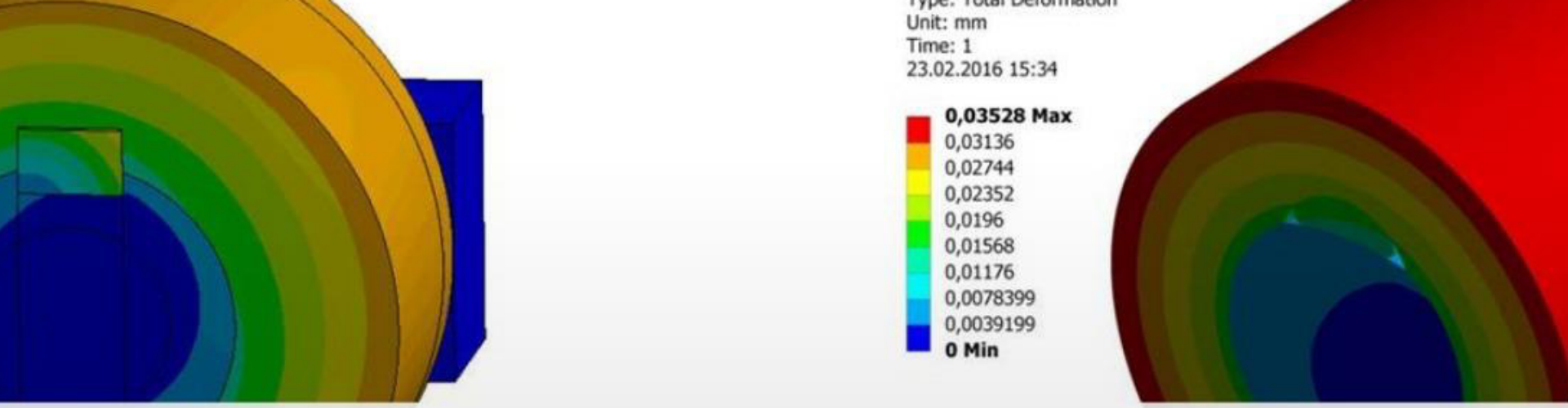

Comparison of the “Tsentsyper’s key joint” and usual key joint

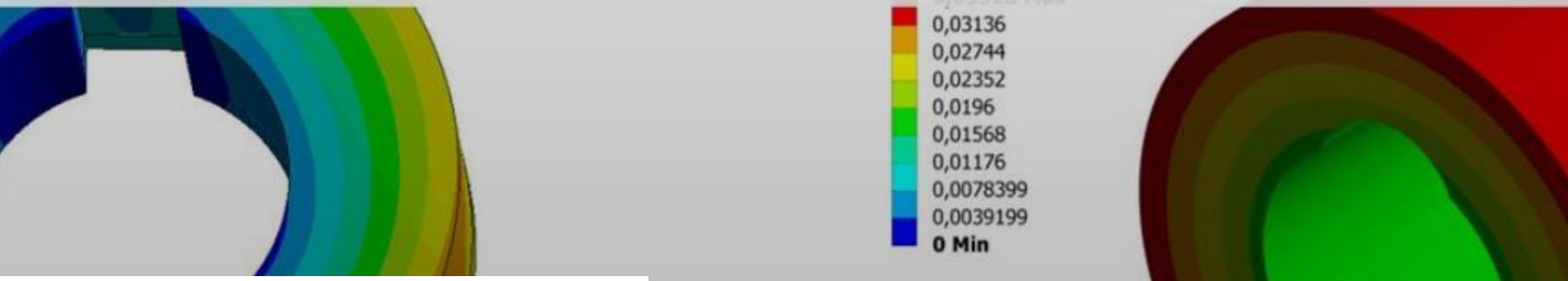

tsentsypers-key-joint.web4ed.org

Continuous shaft

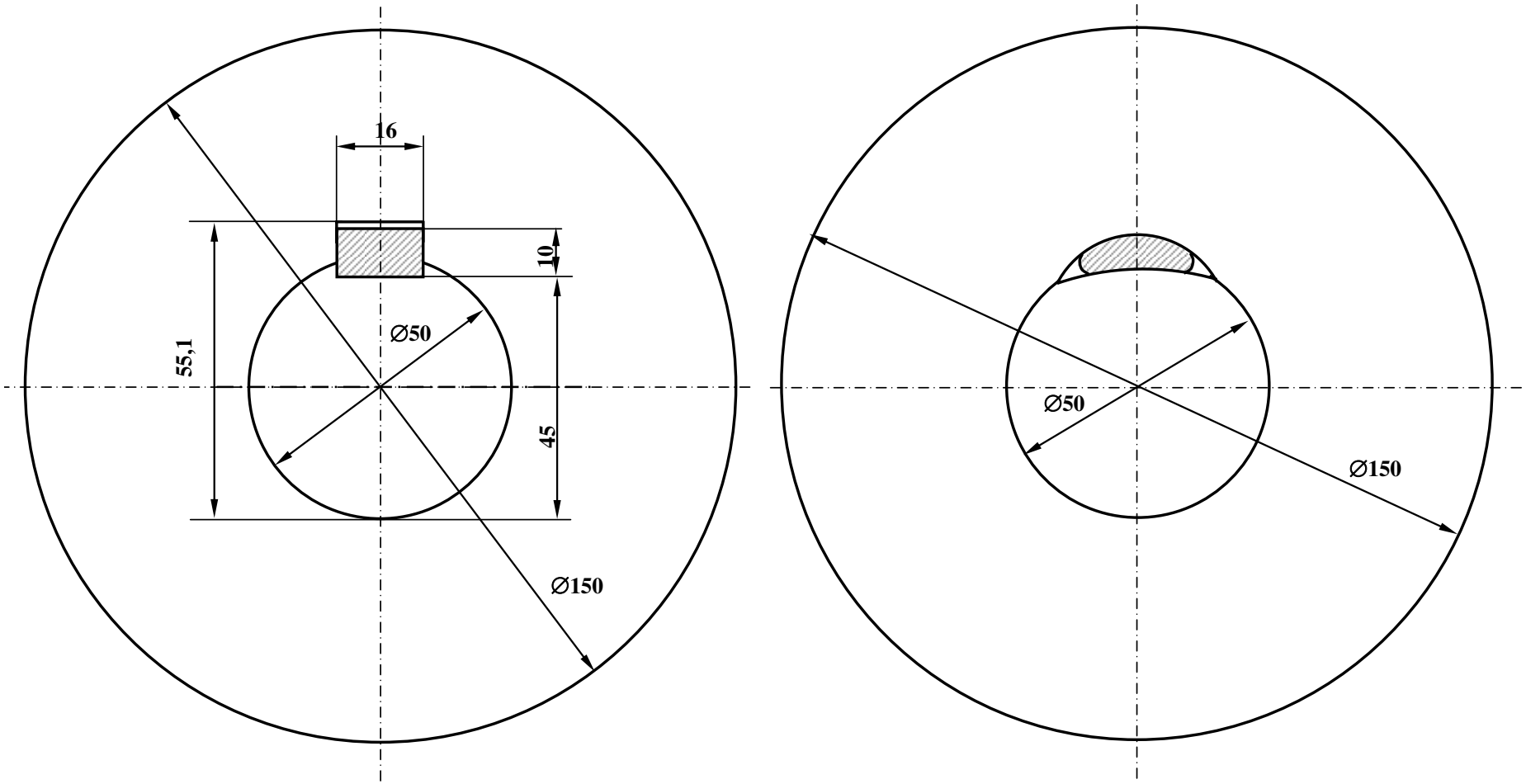

К расчёту шпоночного соединения Ценципера

Read more:

tsentsypers-key-joint.web4ed.org

INVESTIGATED GEOMETRY

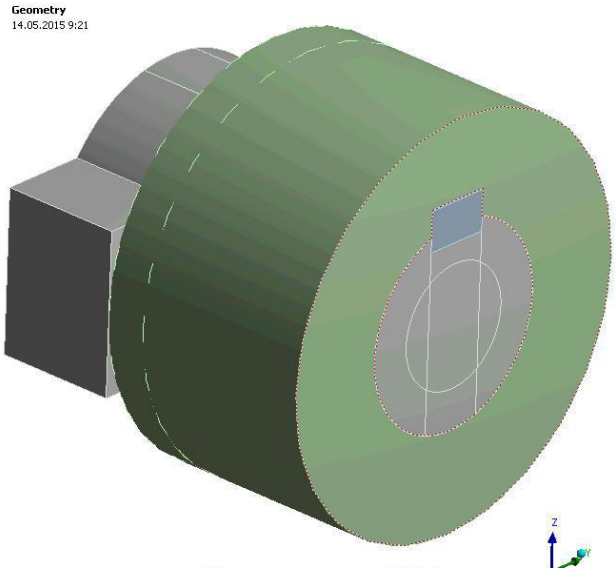

Variant 1_1

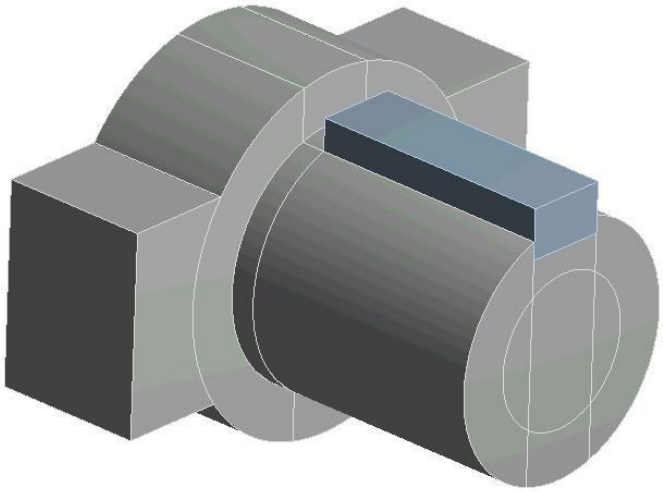

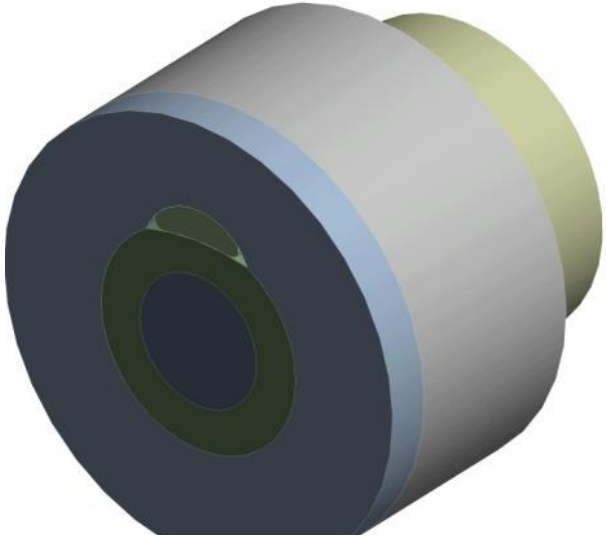

Variant 2_1

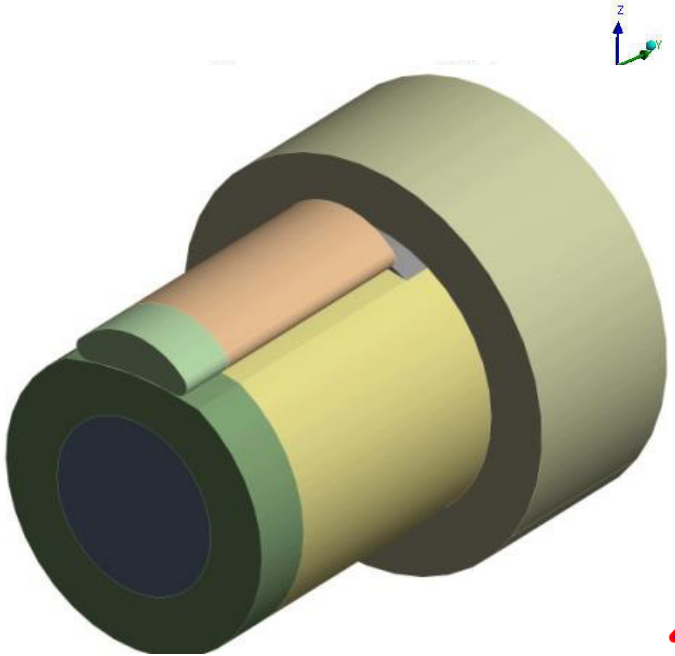

BORDER CONDITIONS OF PRISMATIC KEY JOINT

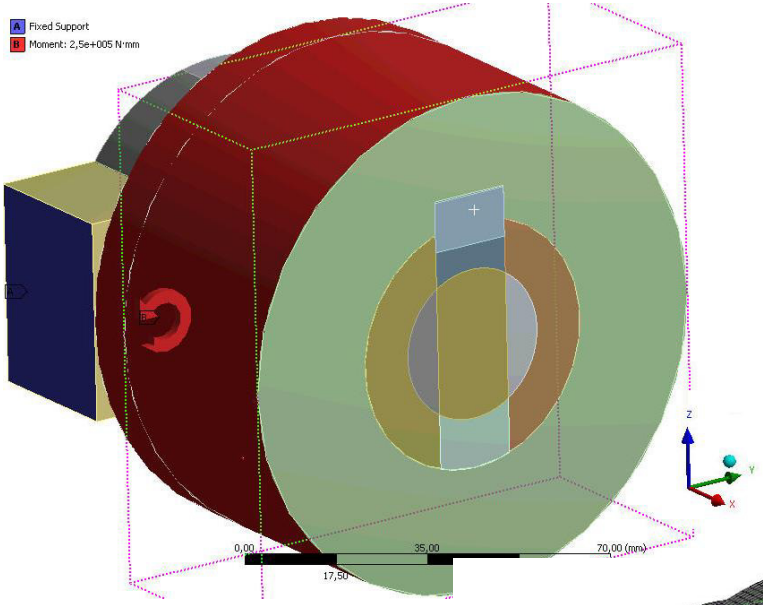

Border conditions:
torque moment of 750 Nm,
shaft is rigidly fixed

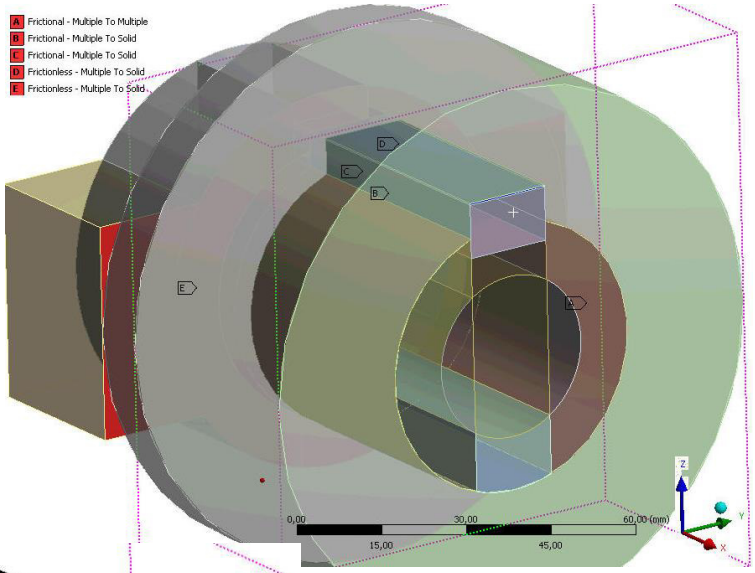

Contact interaction:
bonded contact 0,2

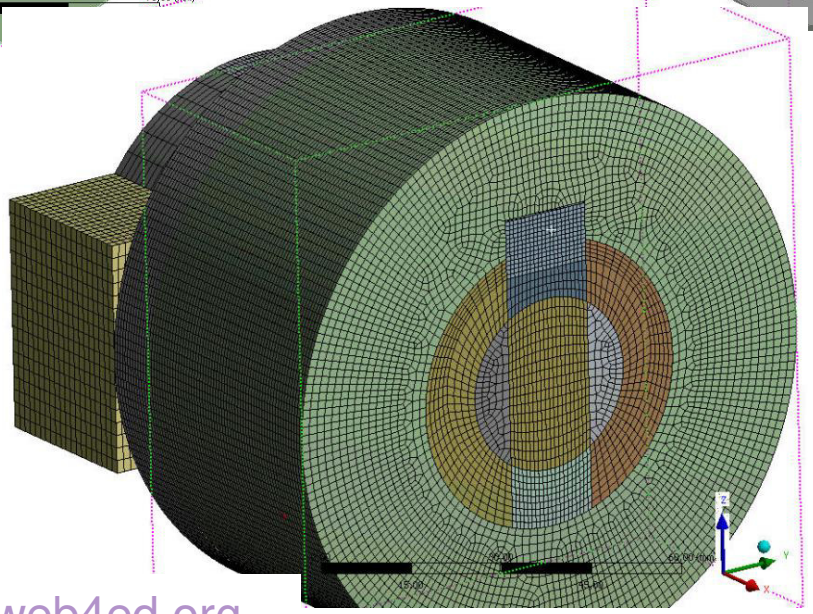

Finite-element model

tsentsypers-key-joint.web4ed.org

BORDER CONDITIONS
OF A NEW PRISMATIC KEY JOINT
TEST 2

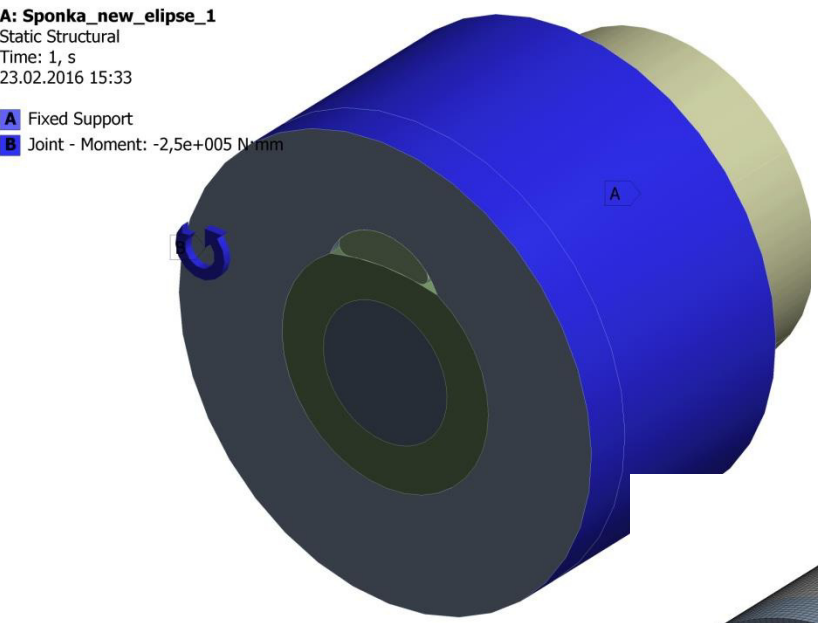

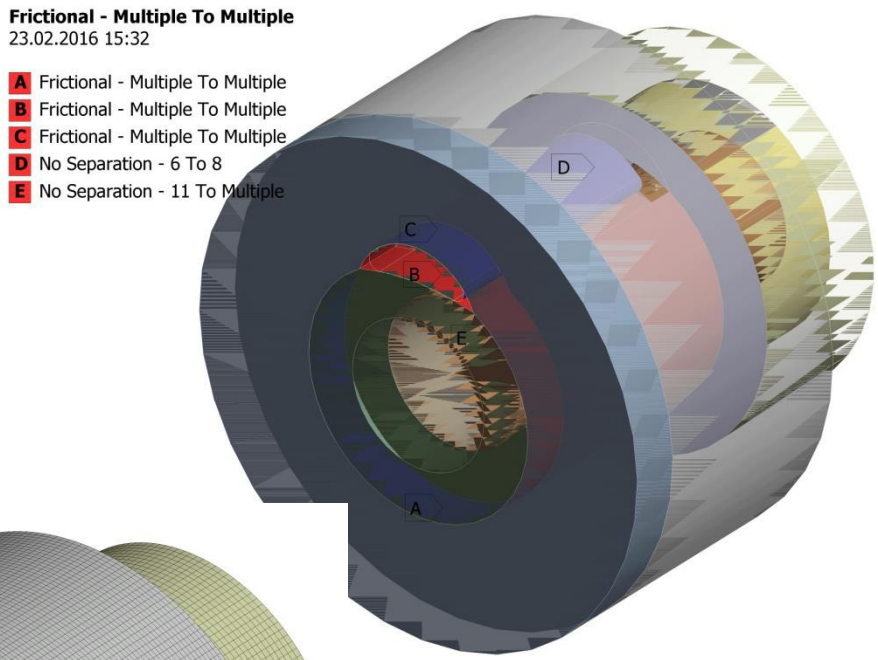

Border conditions:
torque moment of 750 Hm,
shaft is rigidly fixed

Contact interaction:
bonded contact 0,2

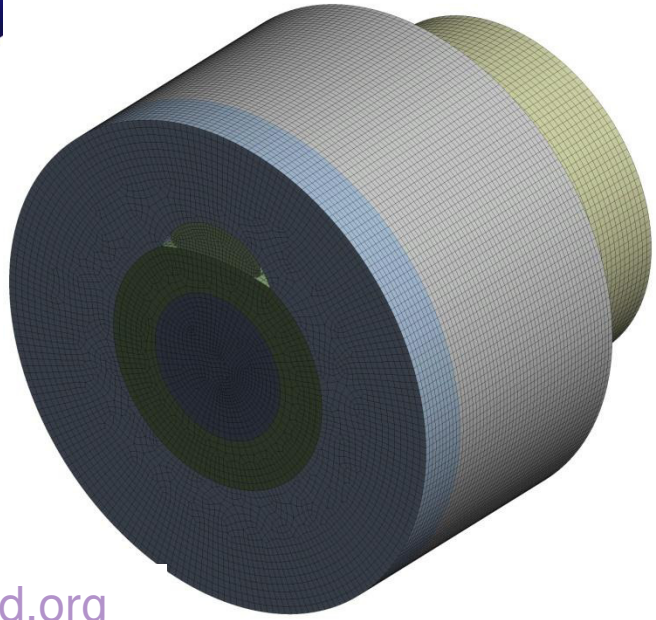

Finite-element model

COMPARISON OF OBTAINED RESULTS
VARIANT 1

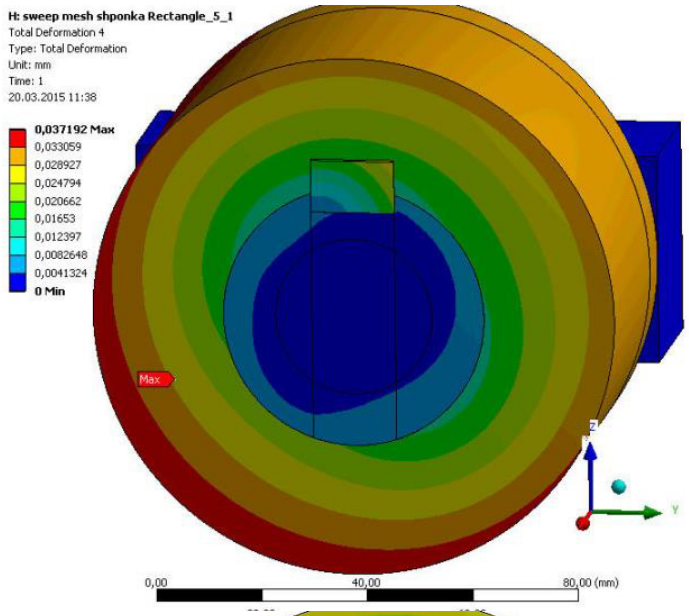

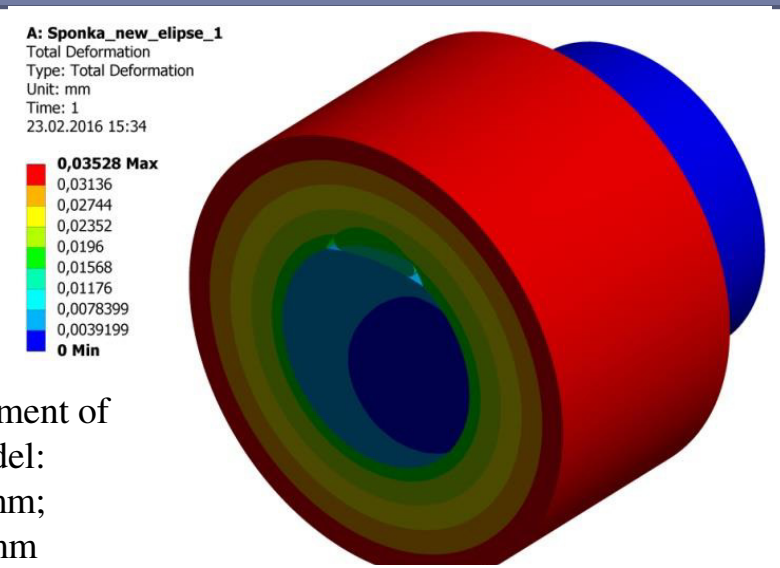

The total displacement of the entire model:
usaul- 0,037mm;
new - 0,035mm

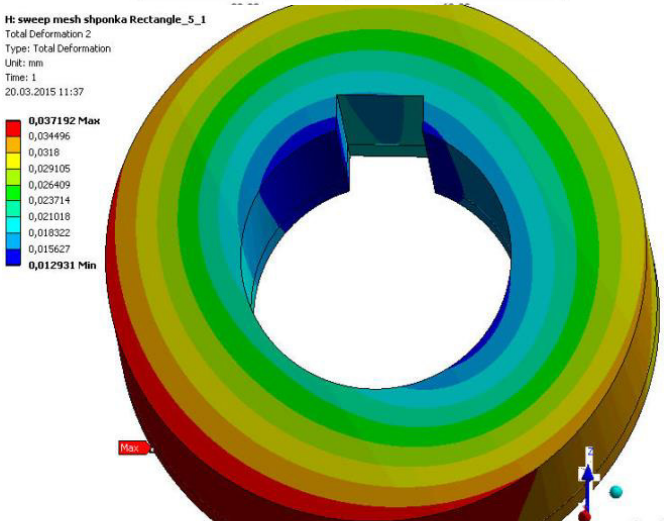

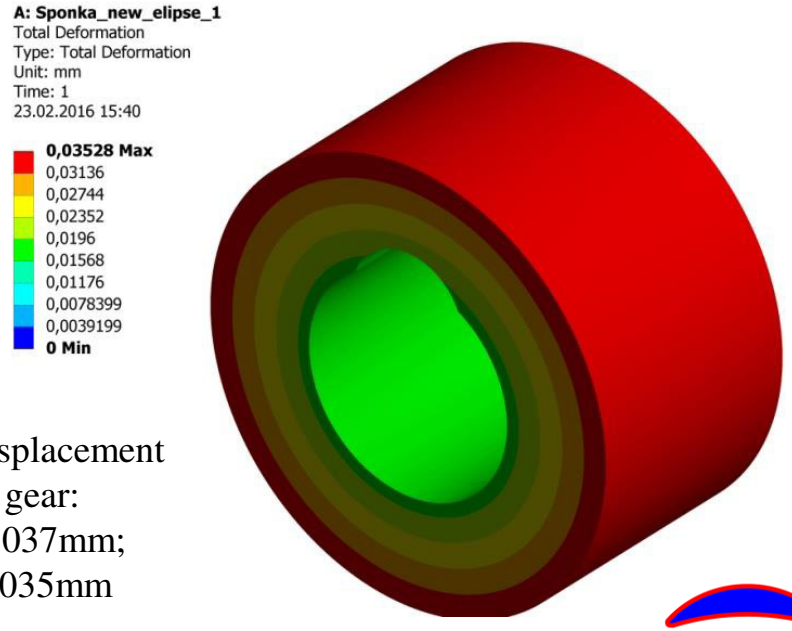

The total displacement of the gear:
usaul - 0,037mm;
new - 0,035mm

COMPARISON OF OBTAINED RESULTS
VARIANT 1

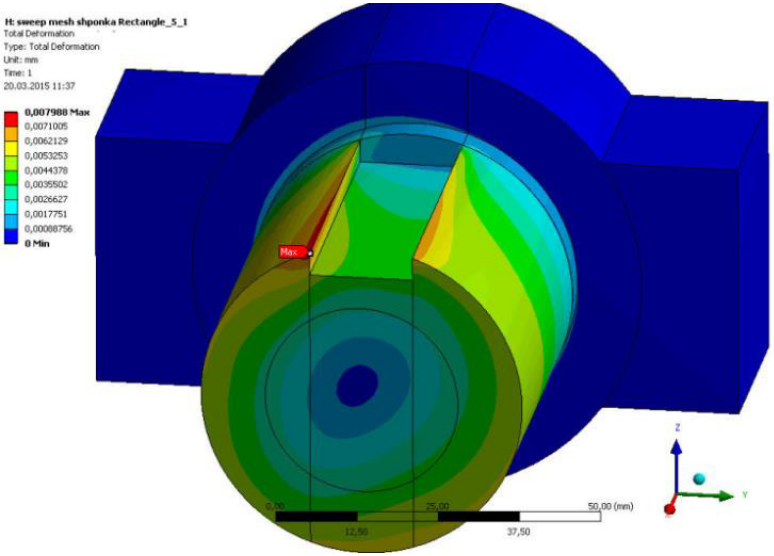

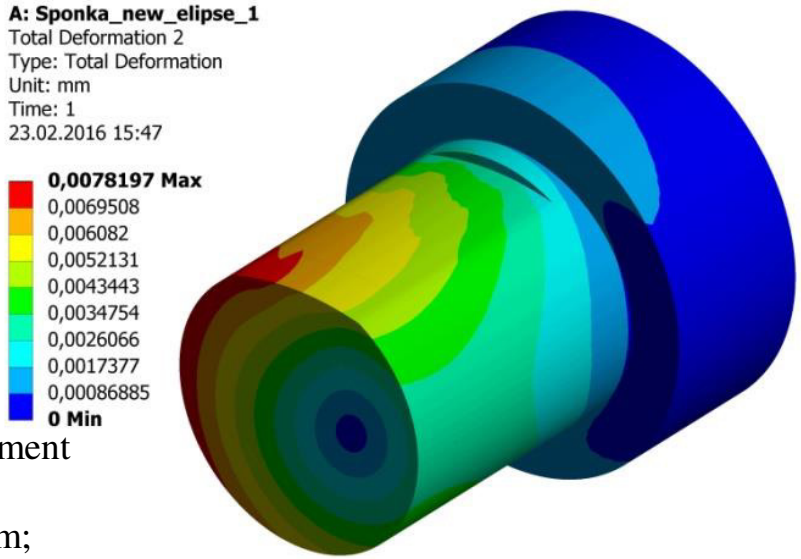

The total displacement
of the shaft:
usaul - 0,007mm;
new - 0,007mm

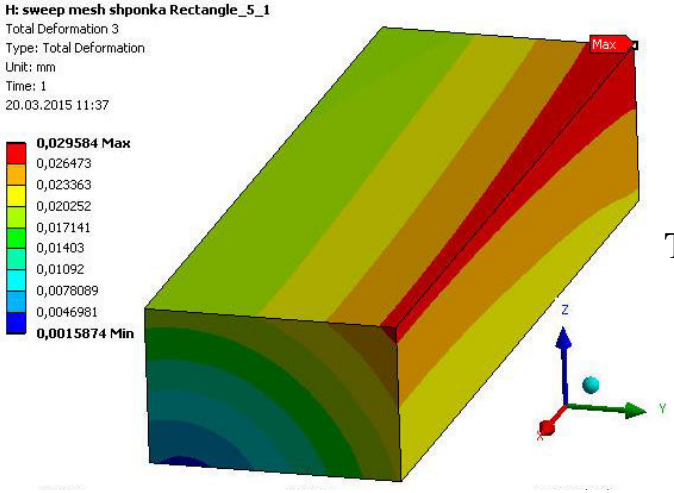

The total displacement
of the key:
usaul - 0,029 mm,
new - 0,017 mm

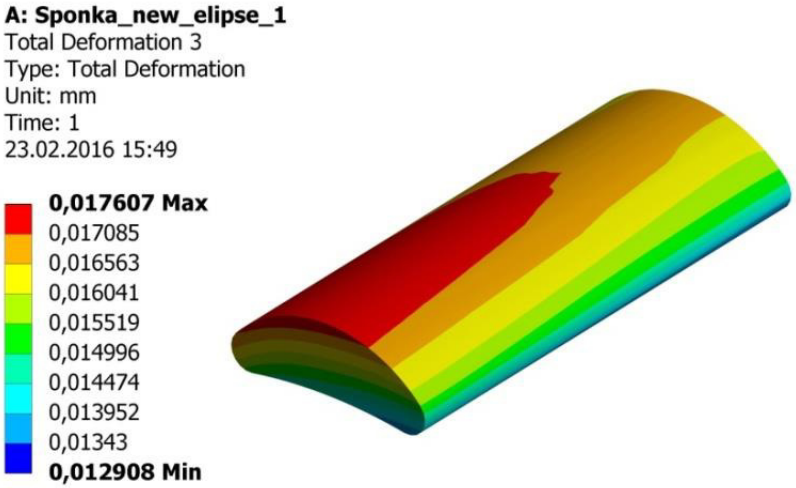

COMPARISON OF OBTAINED RESULTS
VARIANT 1

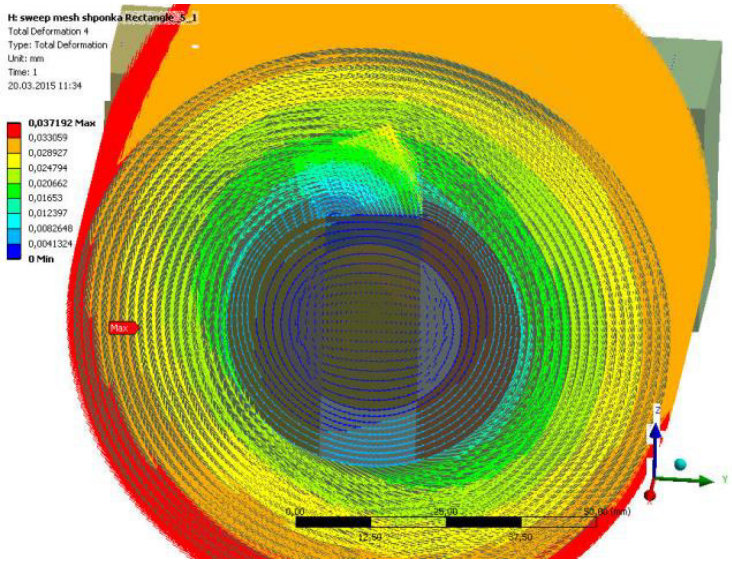

The total displacement of the entire model:
usaul - 0,037mm,
new - 0,035mm

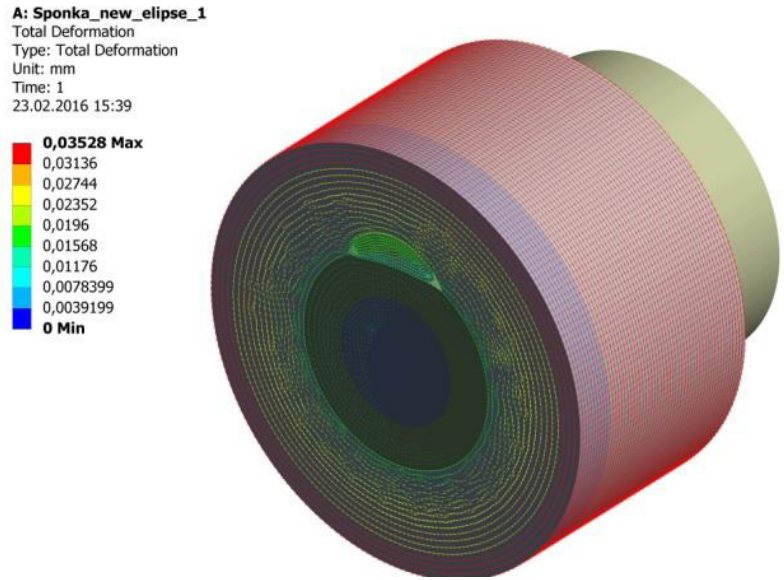

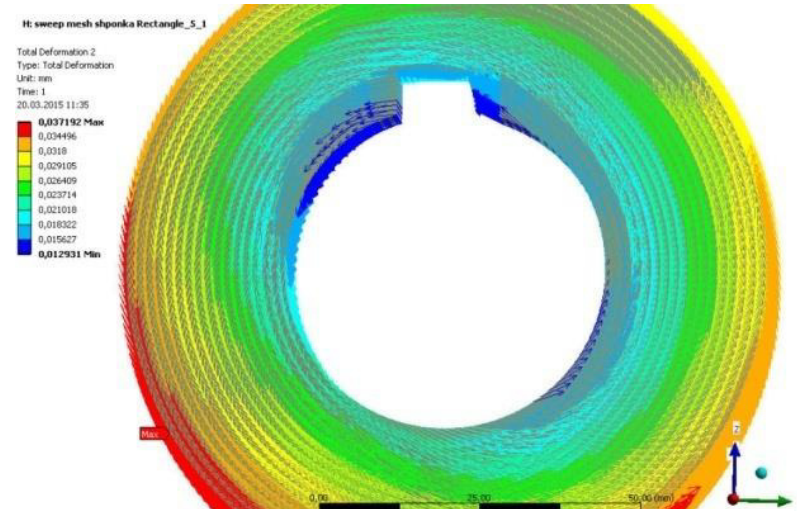

The total displacement of the gear:
usaul - 0,037mm,
new - 0,035mm

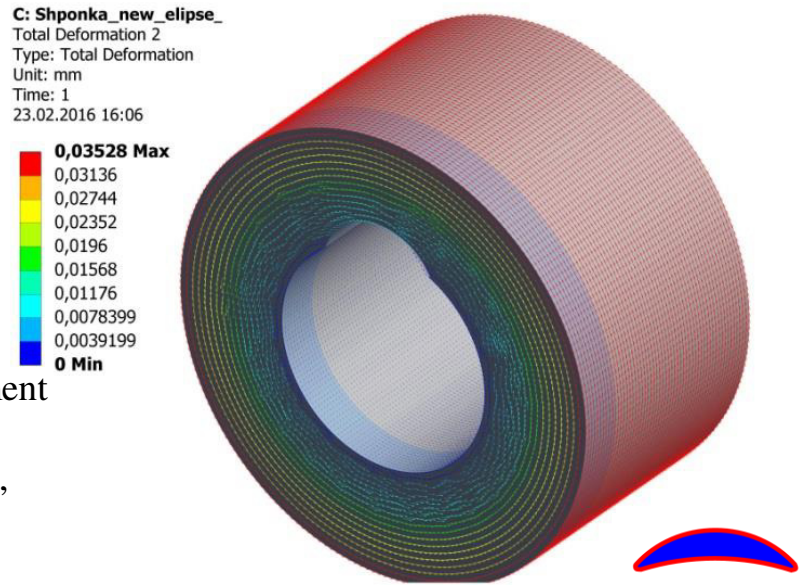

COMPARISON OF OBTAINED RESULTS
VARIANT 1

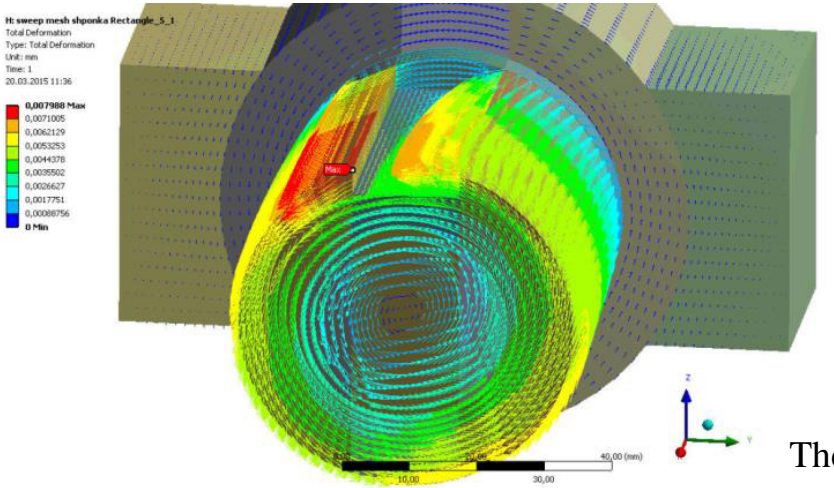

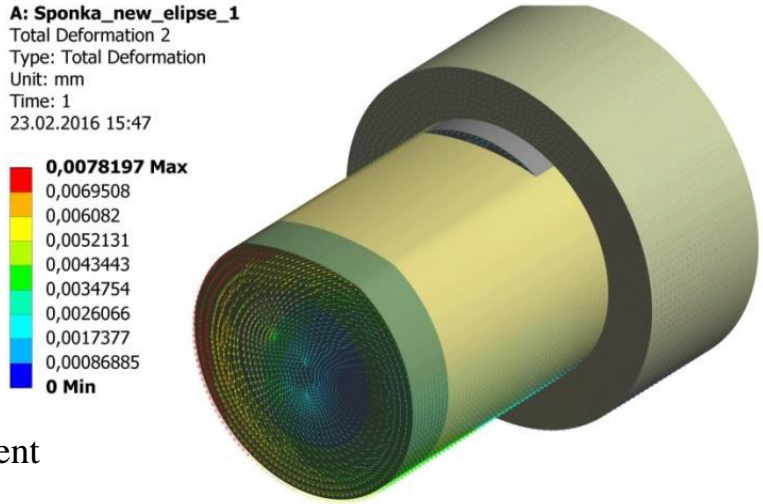

The total displacement
of the shaft:
usaul - 0,007 mm;
new - 0,007 mm

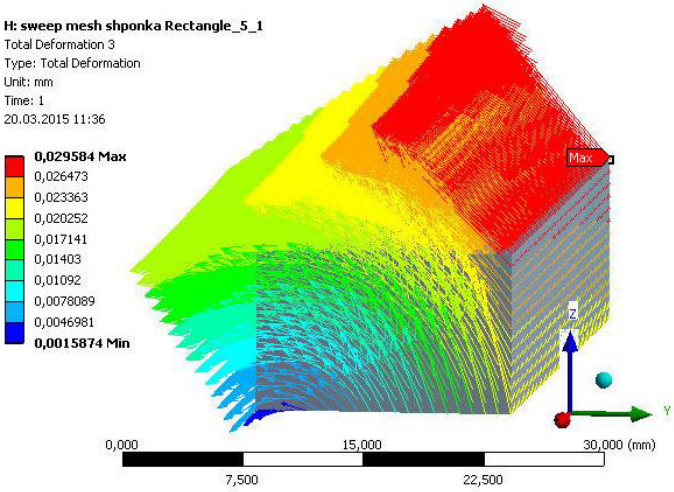

The total displacement
of the key:
usaul - 0,029 mm,
new - 0,017 mm

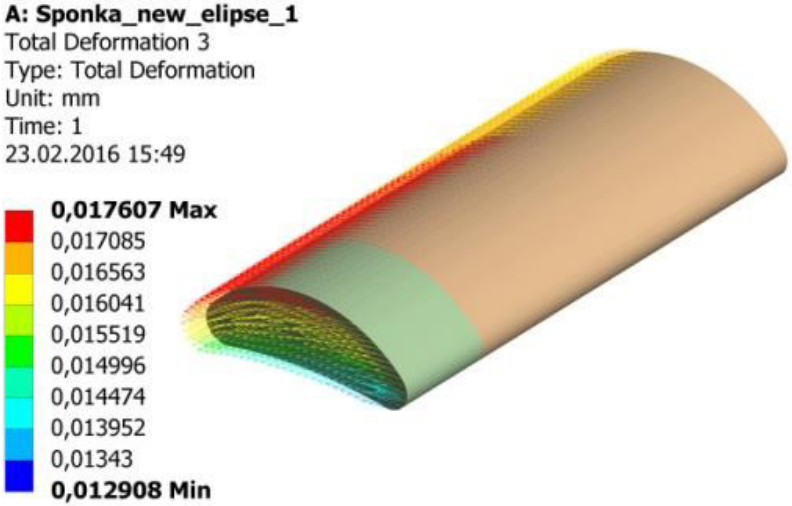

COMPARISON OF OBTAINED RESULTS
VARIANT 1

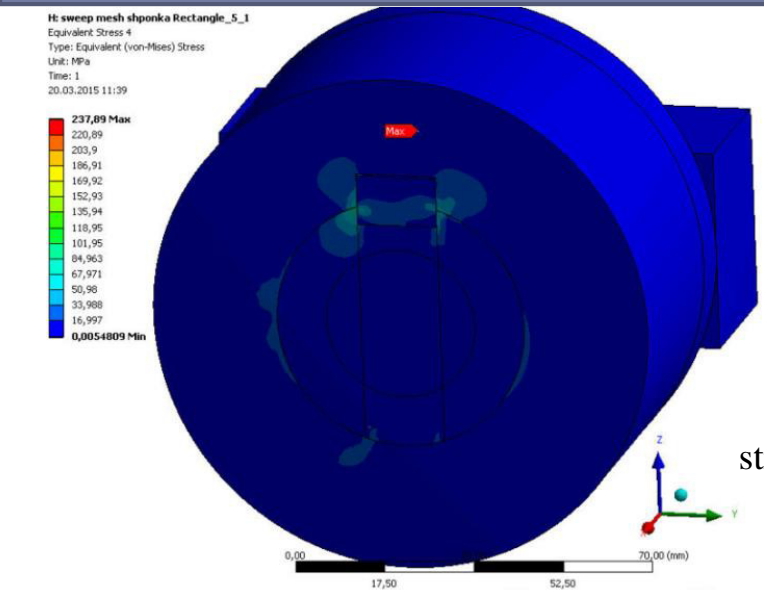

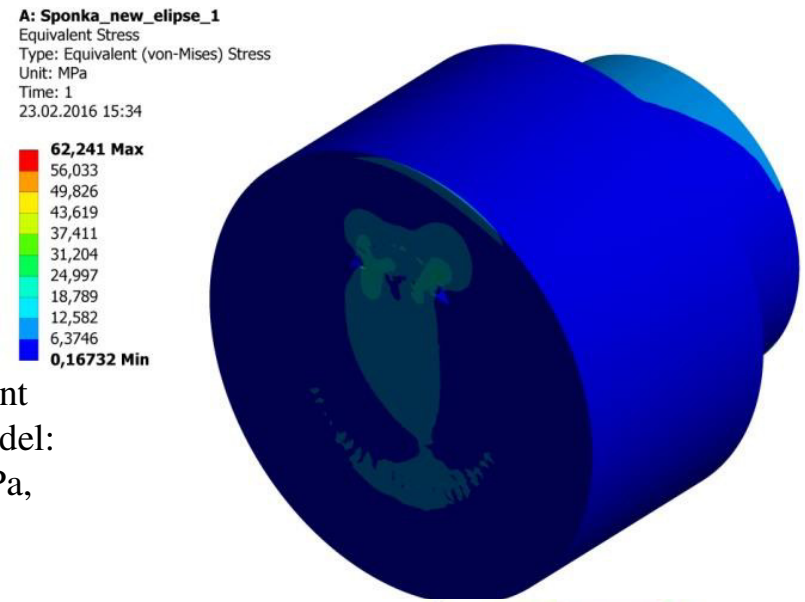

Mises total equivalent stress of the entire model:
…usaul - 237,89 MPa,
new - 62 MPa

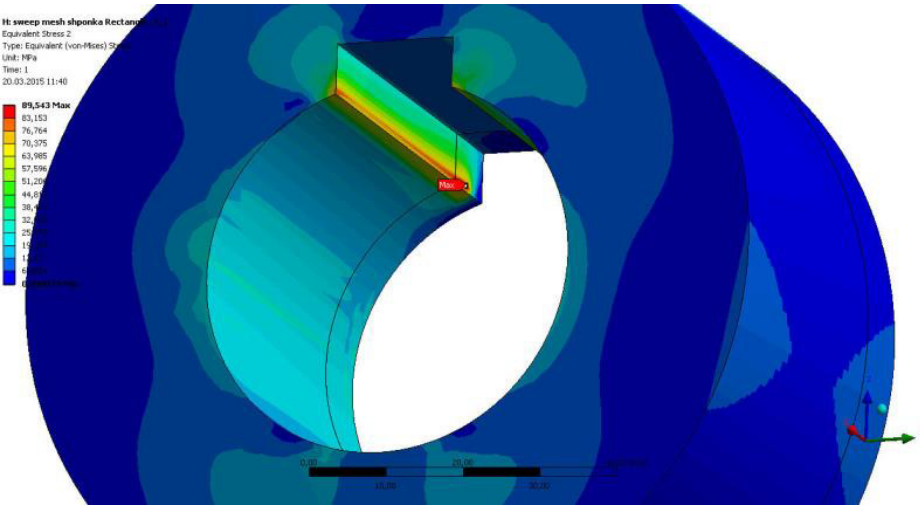

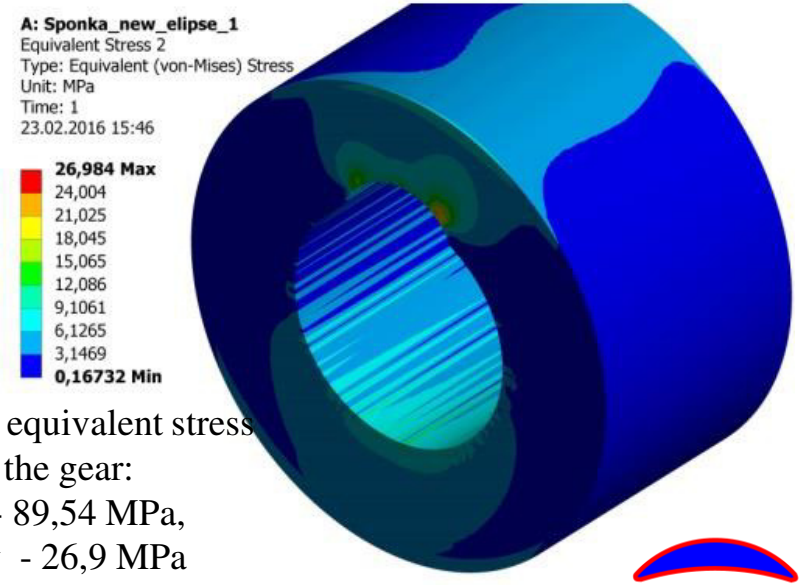

Mises total equivalent stress of the gear:
usaul - 89,54 MPa,
new - 26,9 MPa

COMPARISON OF OBTAINED RESULTS
VARIANT 1

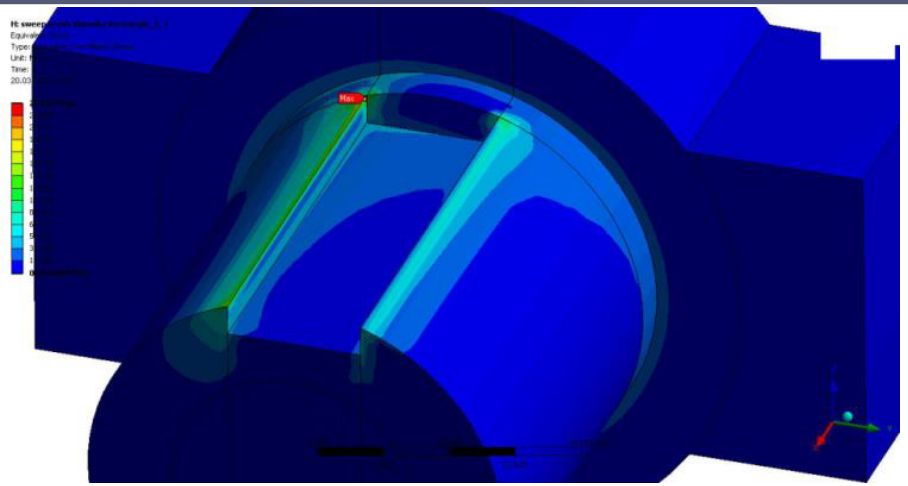

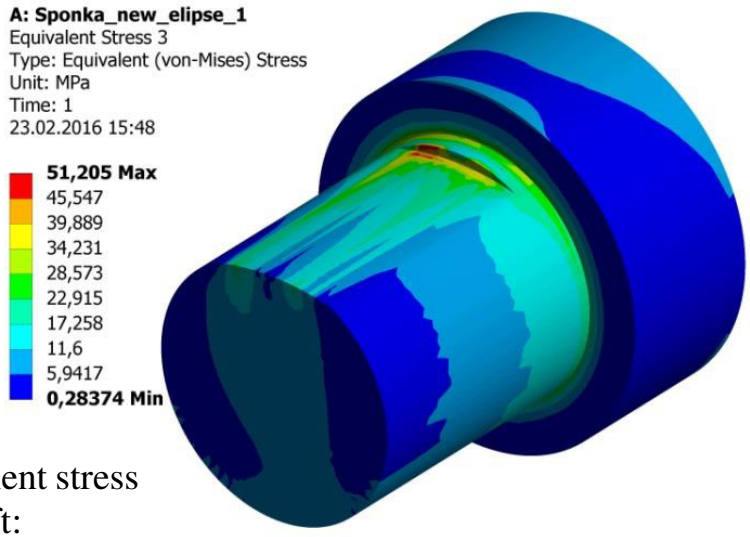

Mises total equivalent stress
of the shaft:
usaul - 237,89 MPa,
new - 51,26 MPa

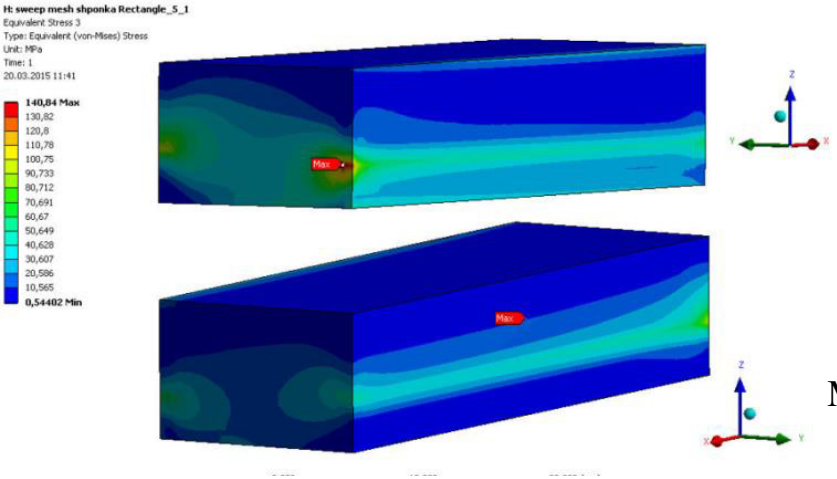

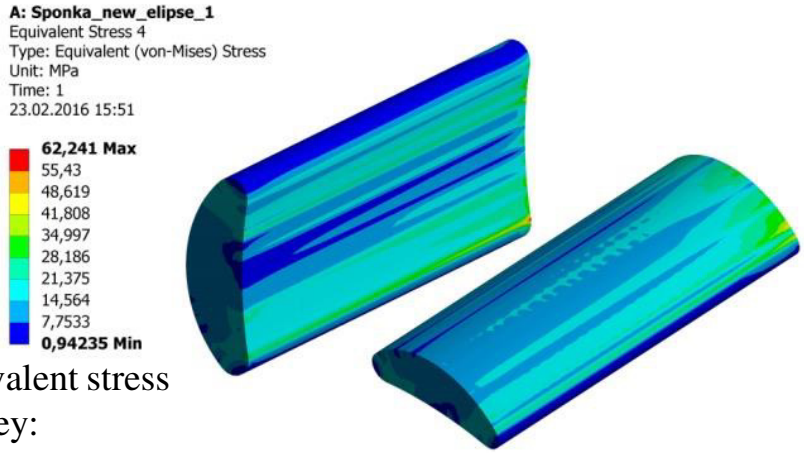

Mises total equivalent stress
of the key:
usaul - 140,84 MPa,
new - 62,2 MPa

Hollow shaft

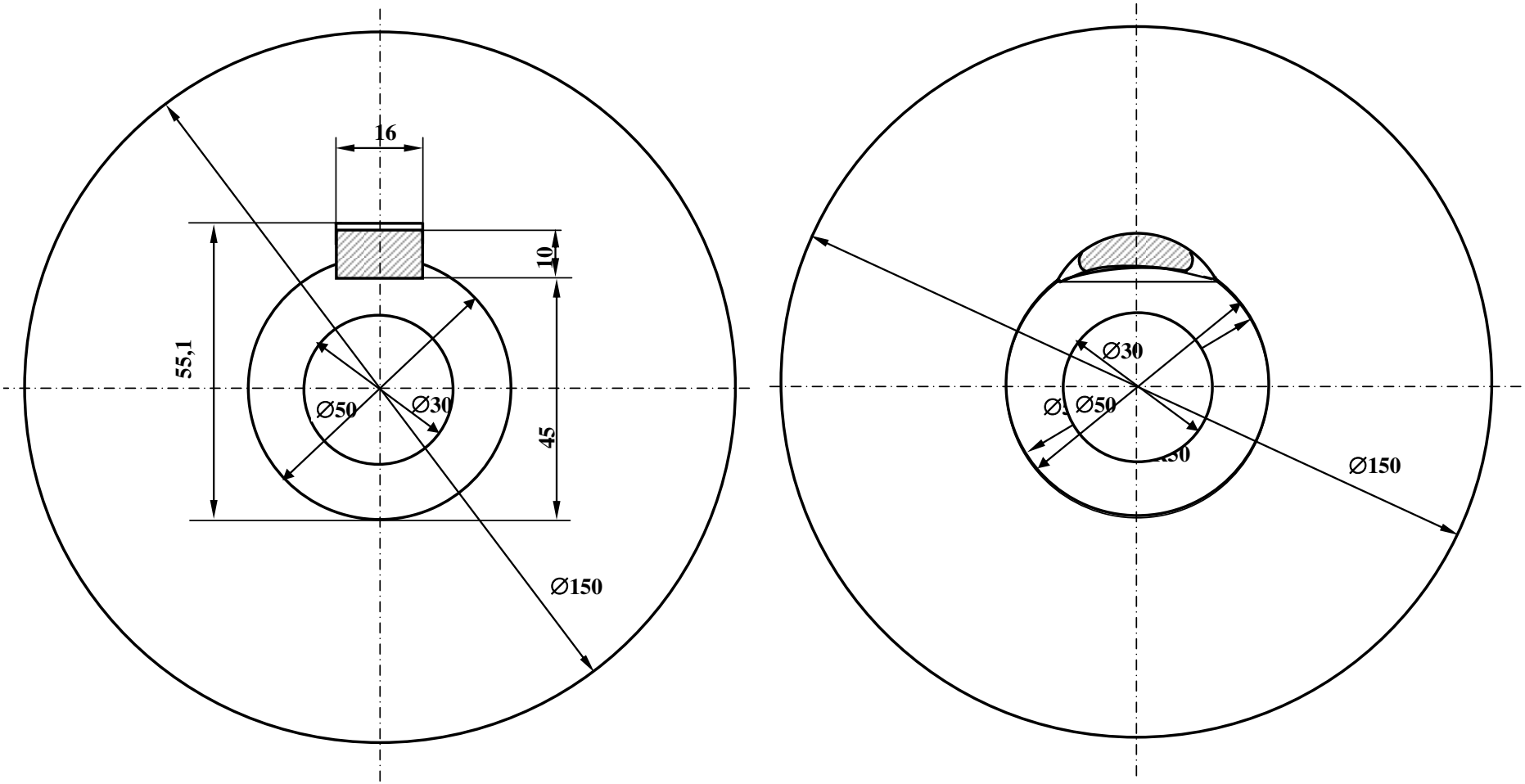

К расчёту шпоночного соединения Ценципера

Read more:

tsentsypers-key-joint.web4ed.org

INVESTIGATED GEOMETRY

Variant 1_1

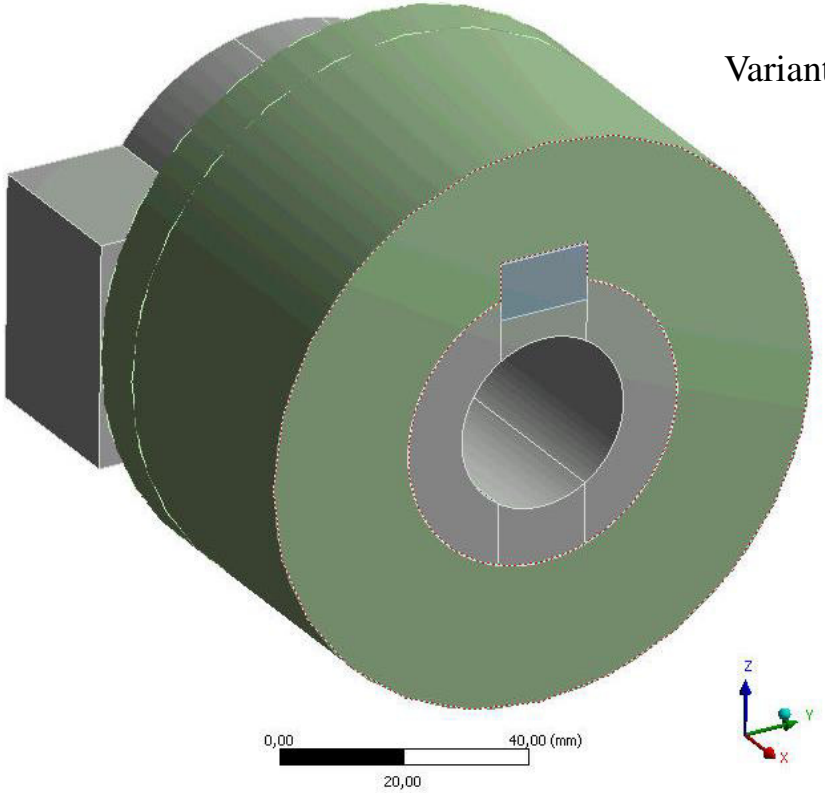

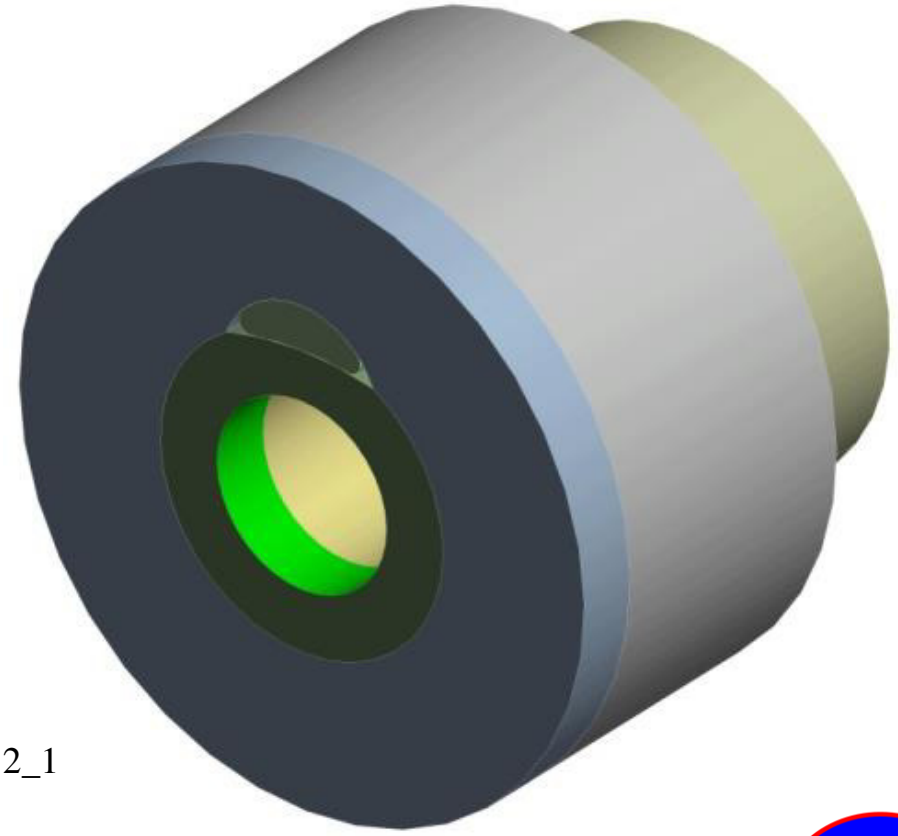

Variant 2_1

BORDER CONDITIONS OF PRISMATIC KEY JOINT

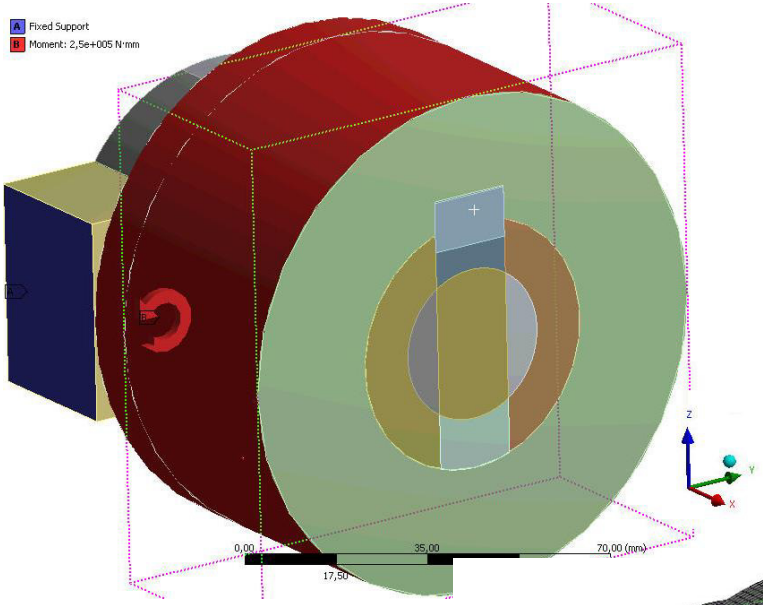

Border conditions:
torque moment of 750 Nm,
shaft is rigidly fixed

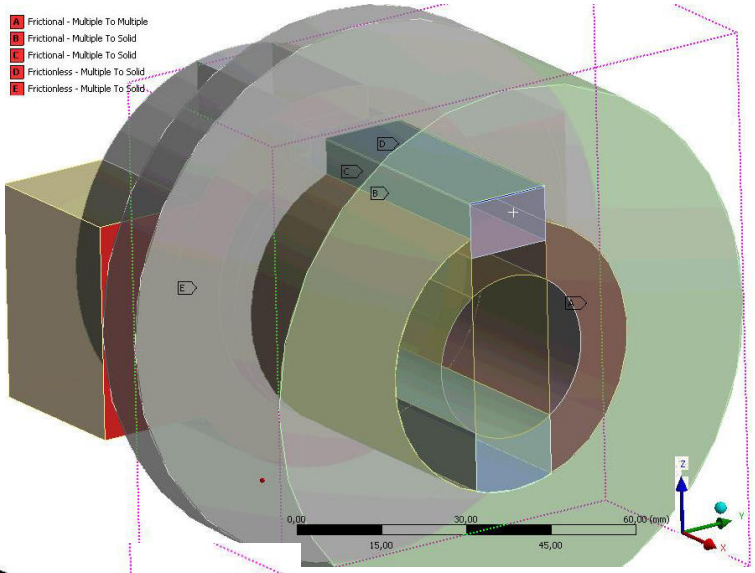

Contact interaction:
bonded contact 0,2

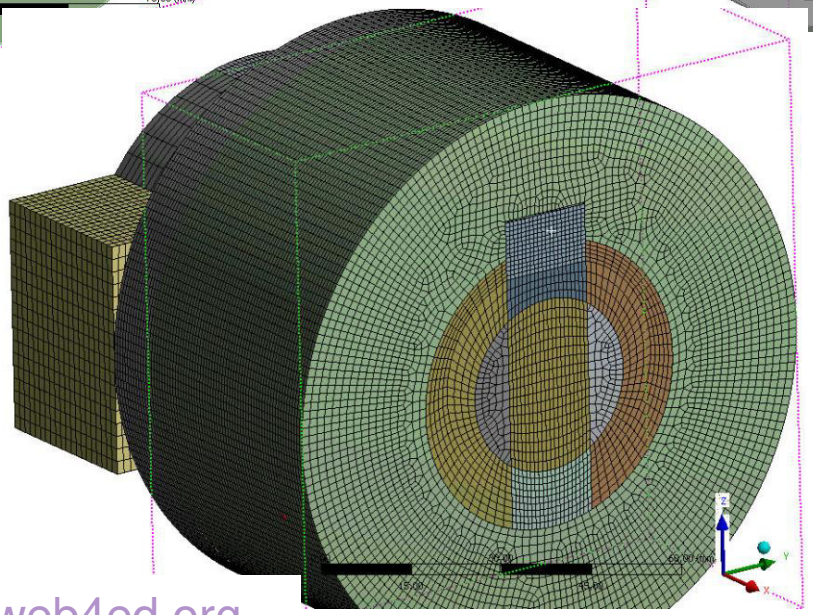

Finite-element model

tsentsypers-key-joint.web4ed.org

BORDER CONDITIONS OF A NEW PRISMATIC KEY JOINT TEST 2

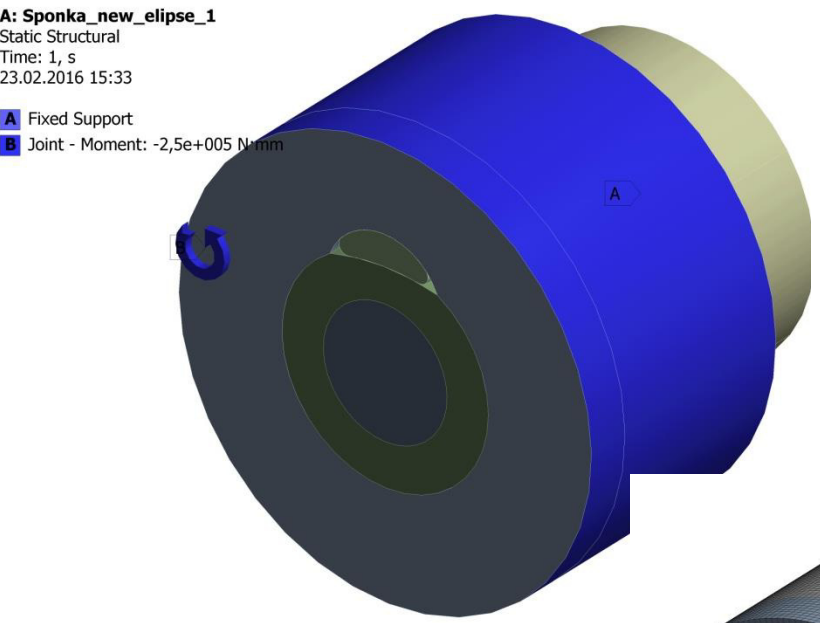

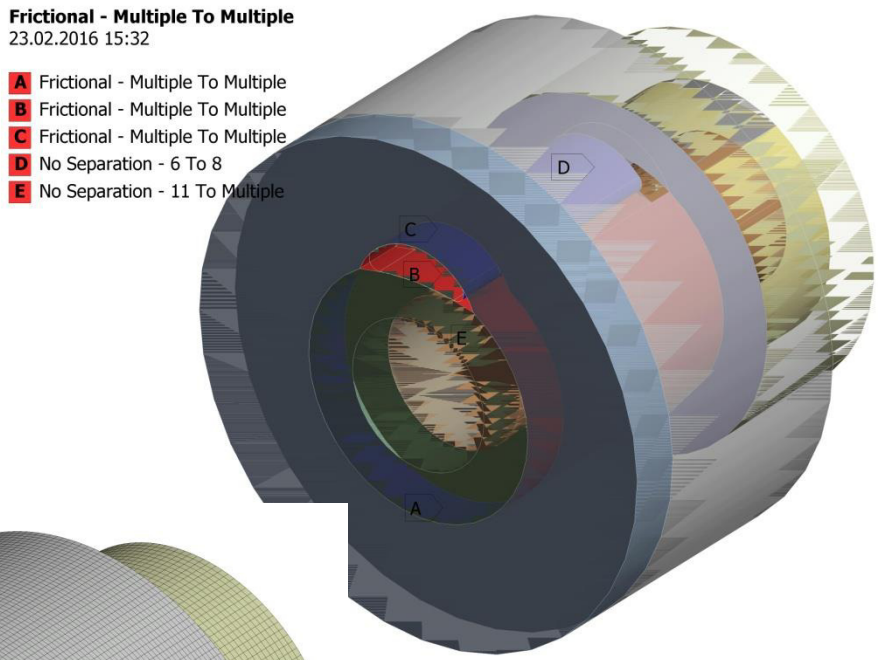

Border conditions:
torque moment of 750 Hm,
shaft is rigidly fixed

Contact interaction:
bonded contact 0,2

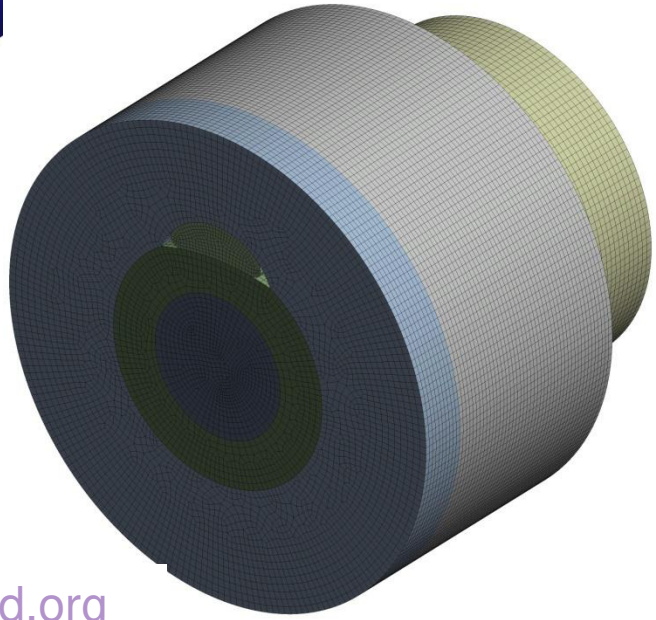

Finite-element model

COMPARISON OF OBTAINED RESULTS
VARIANT 2

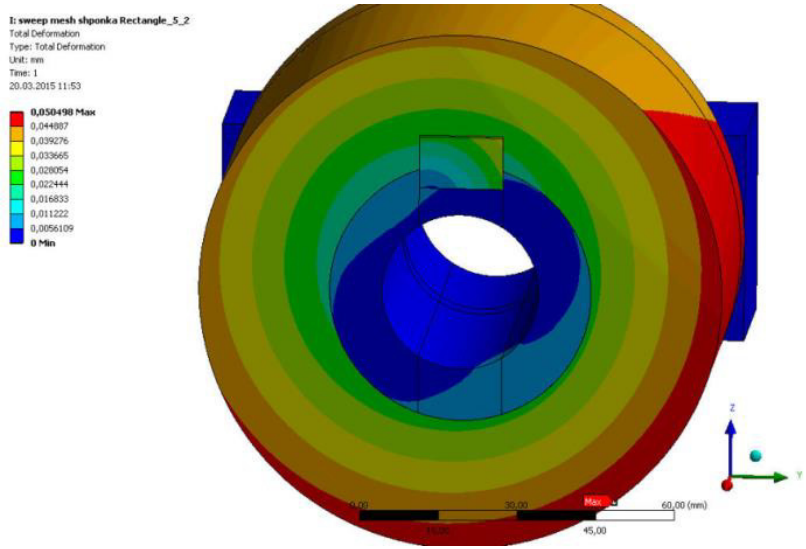

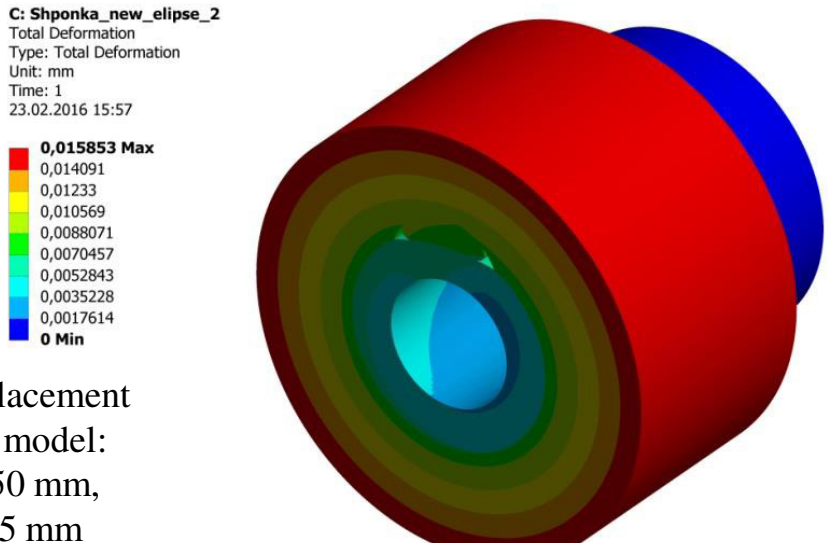

The total displacement
of the entire model:
usaul - 0,050 mm,
new - 0,015 mm

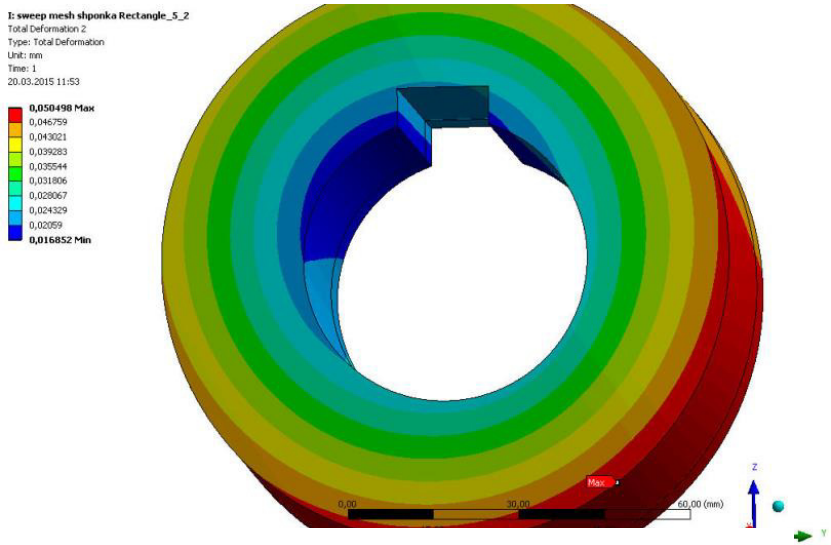

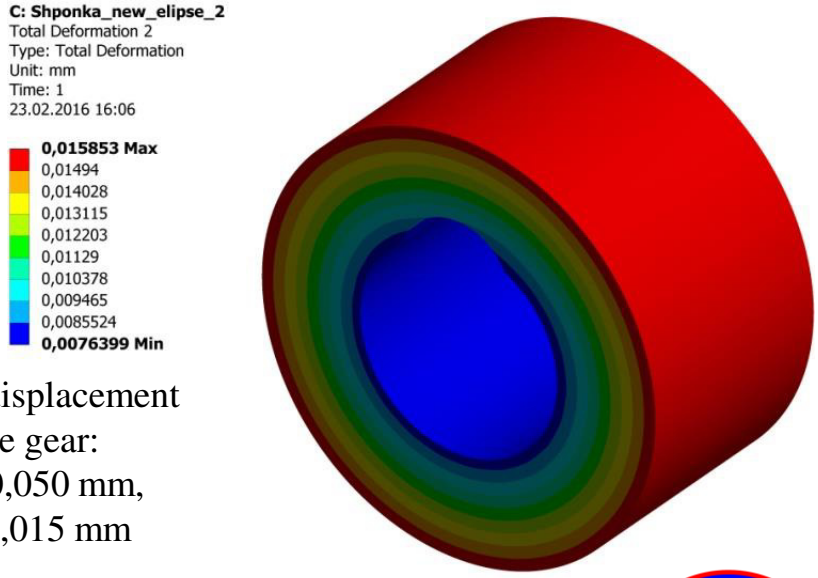

The total displacement
of the gear:
usaul - 0,050 mm,
new - 0,015 mm

COMPARISON OF OBTAINED RESULTS
VARIANT 2

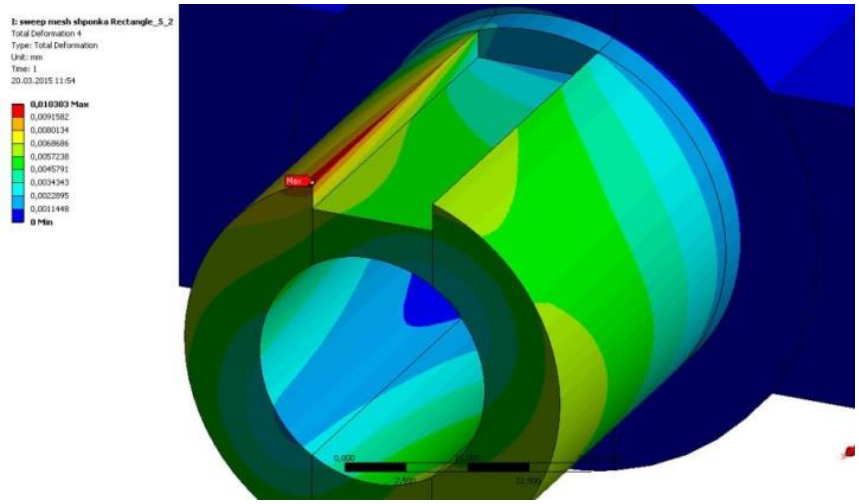

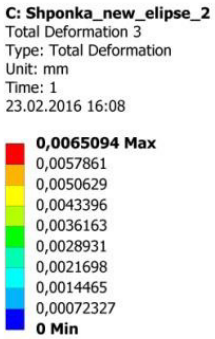

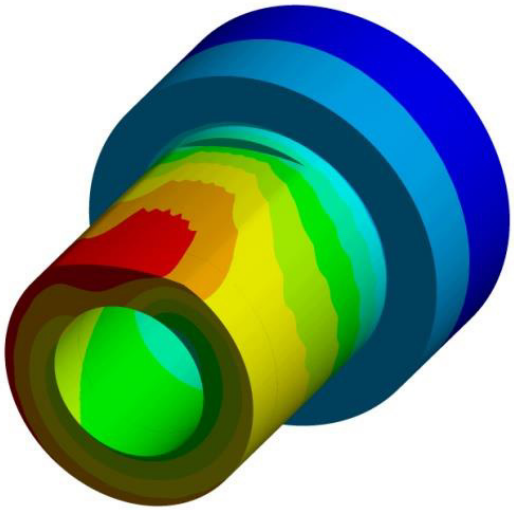

The total displacement
of the shaft:
usaul - 0,01 mm,
new - 0,006 mm

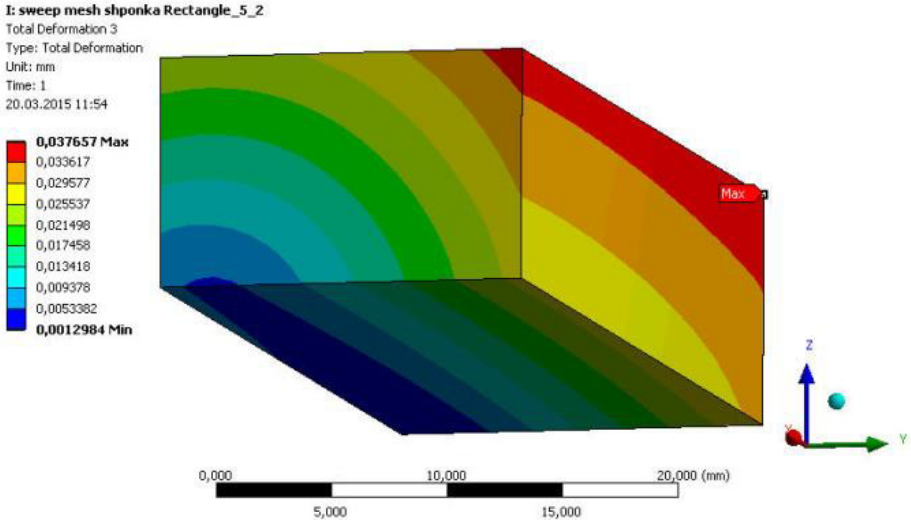

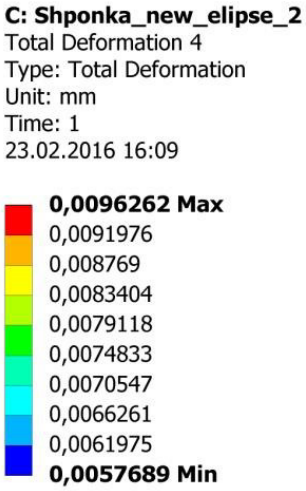

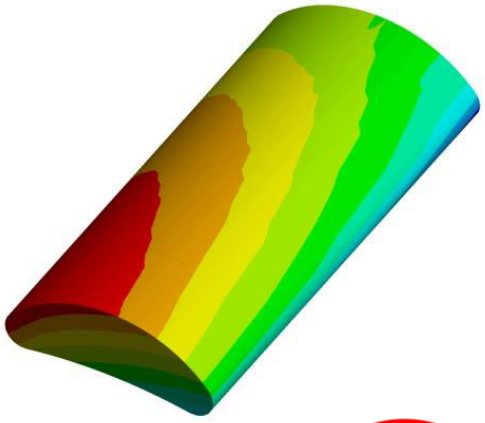

The total displacement of the key:
w - 0,0096 mm

COMPARISON OF OBTAINED RESULTS
VARIANT 2

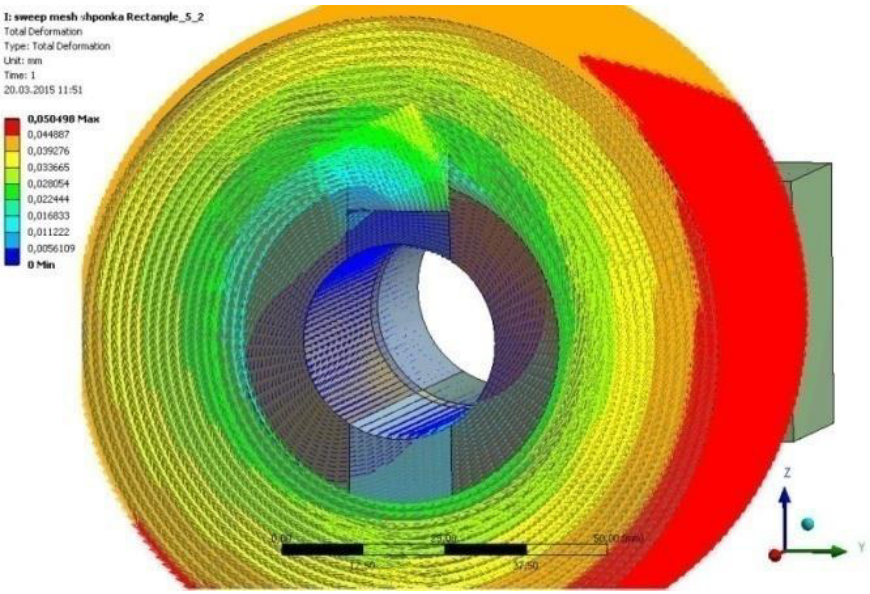

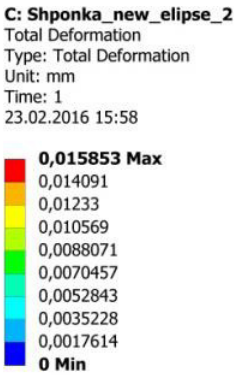

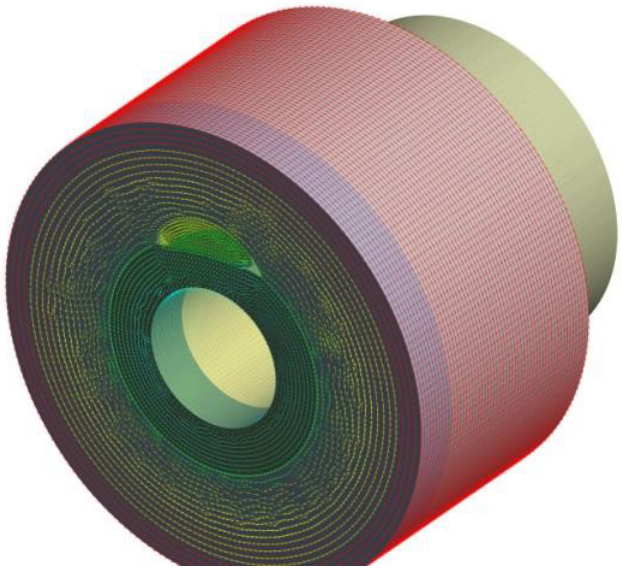

The total displacement
of the entire model:
usaul - 0,050 mm,
new - 0,015 mm

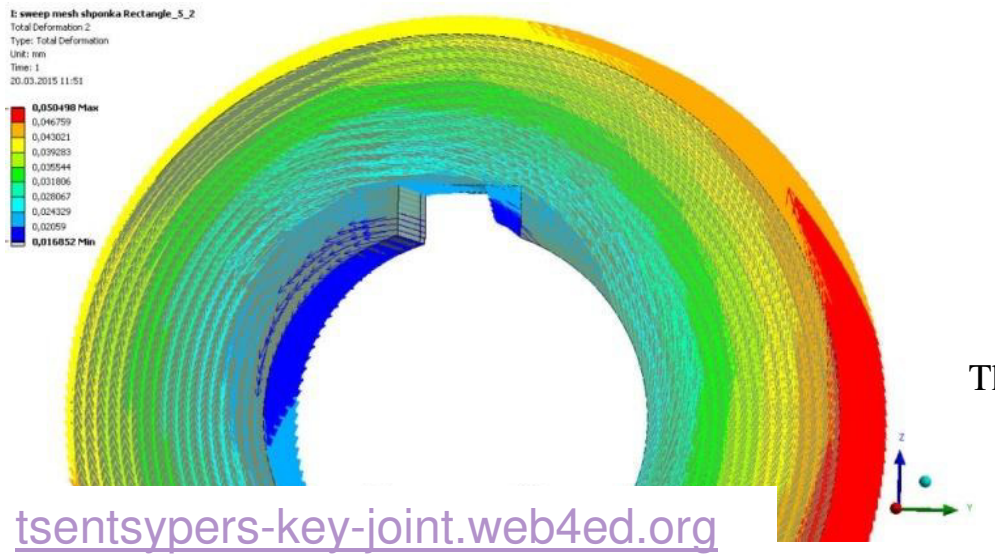

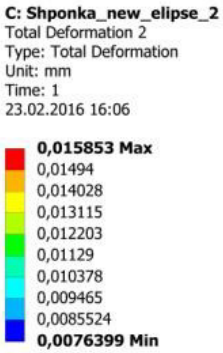

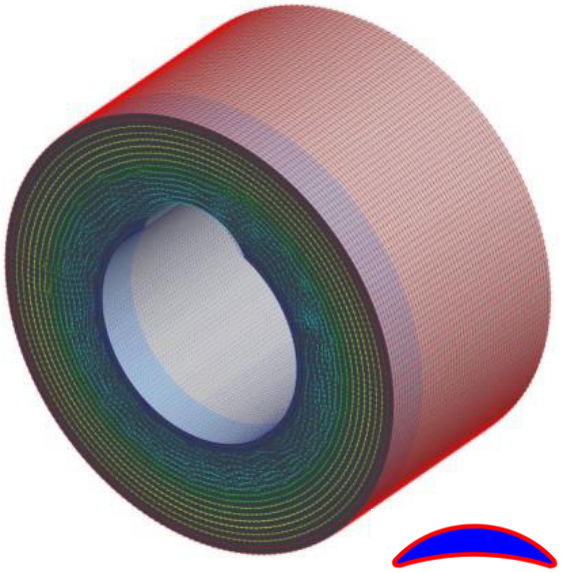

The total displacement
of the gear:
usaul - 0,050 mm,
new - 0,015 mm

COMPARISON OF OBTAINED RESULTS
VARIANT 2

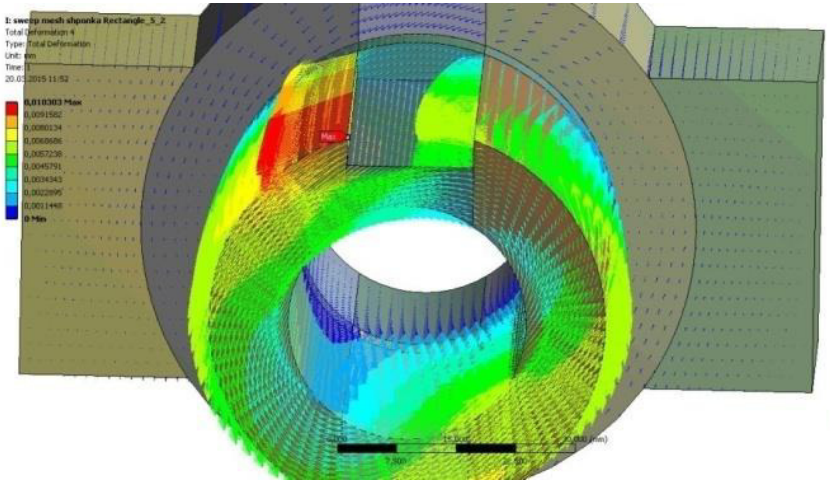

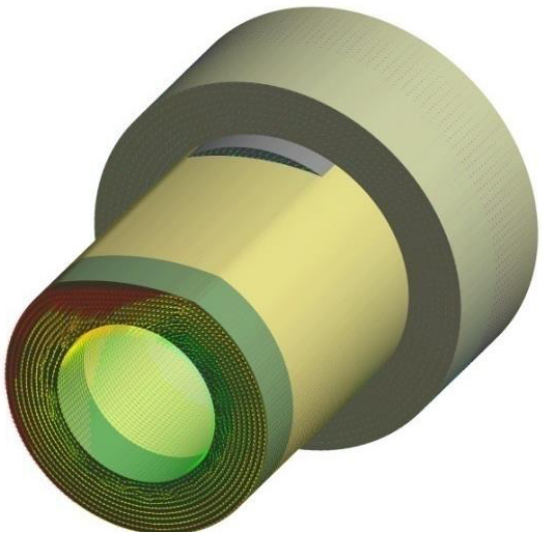

The total displacement
of the shaft:
usaul - 0,01mm,
new - 0,006 mm

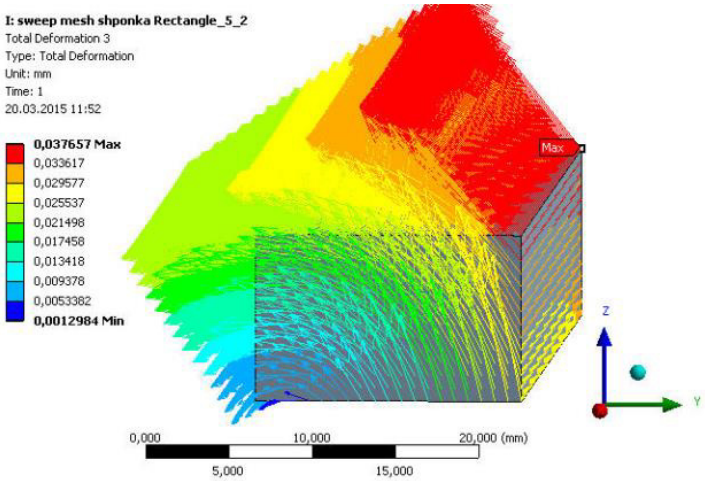

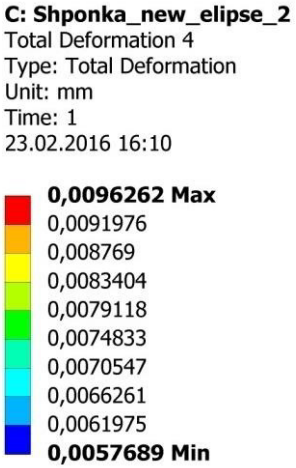

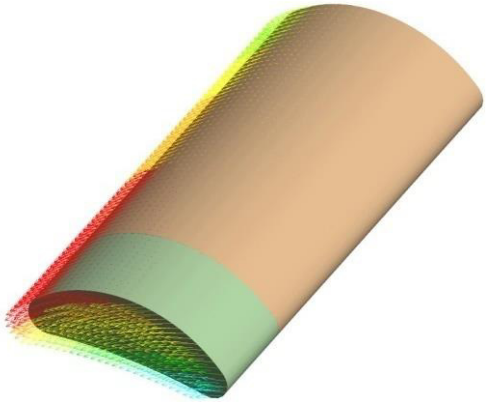

The total displacement of the key:
usaul - 0,037mm,
0,0096 mm

COMPARISON OF OBTAINED RESULTS
VARIANT 2

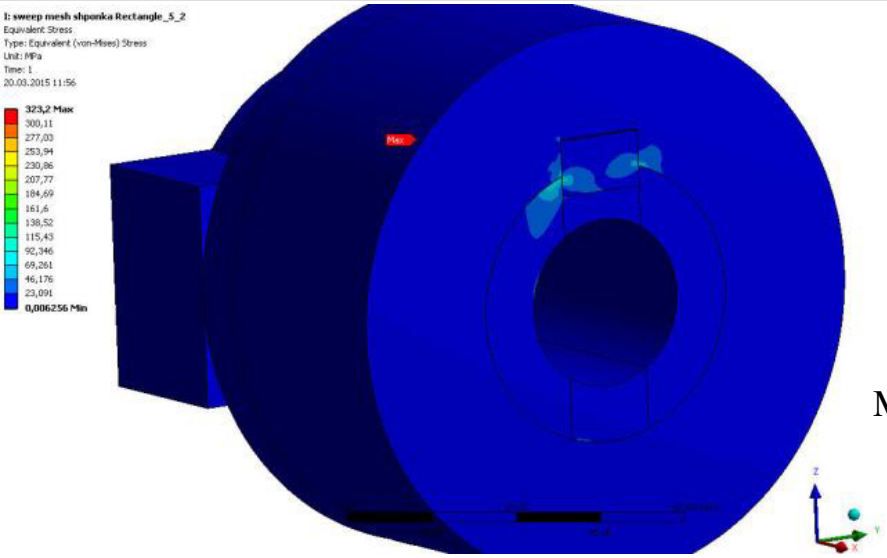

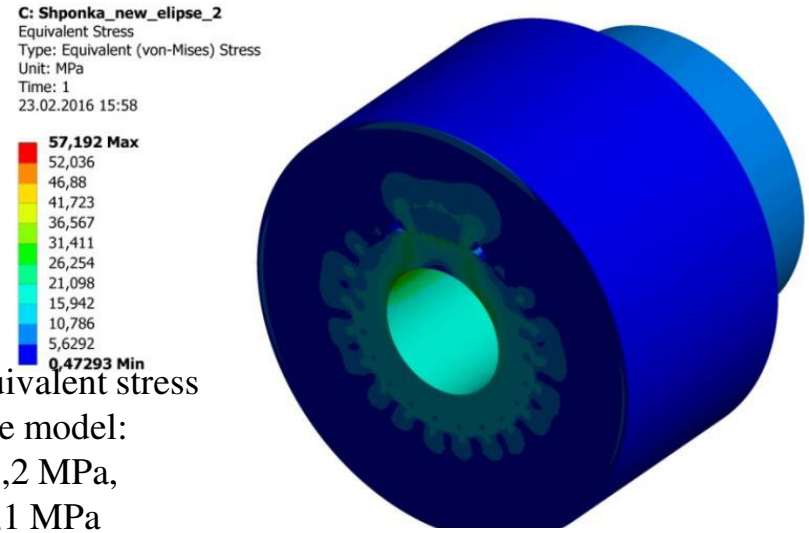

Misses total equivalent stress
of the entire model:
usaul- 323,2 MPa,
new - 57,1 MPa

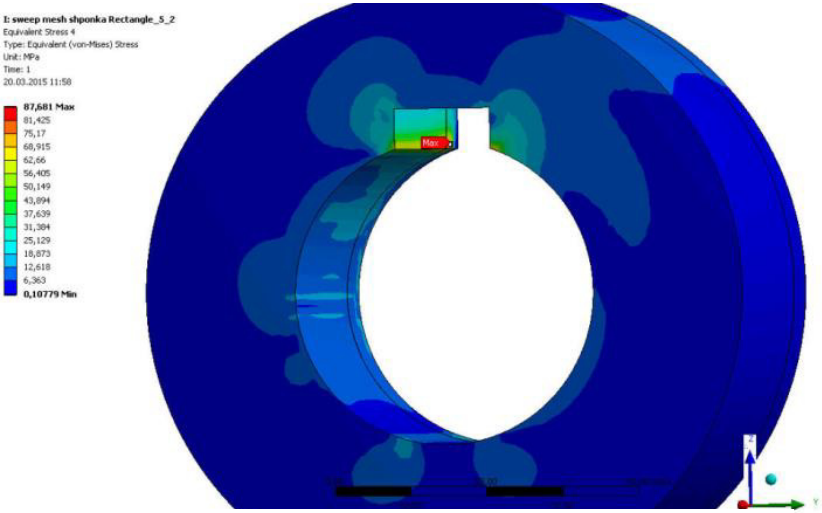

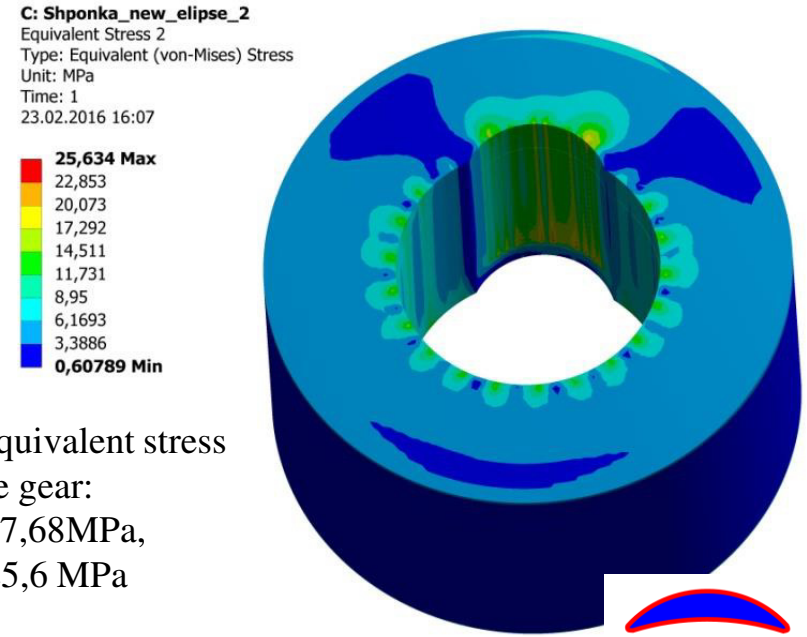

Misses total equivalent stress
of the gear:
usaul- 87,68MPa,
new - 25,6 MPa

COMPARISON OF OBTAINED RESULTS
VARIANT 2

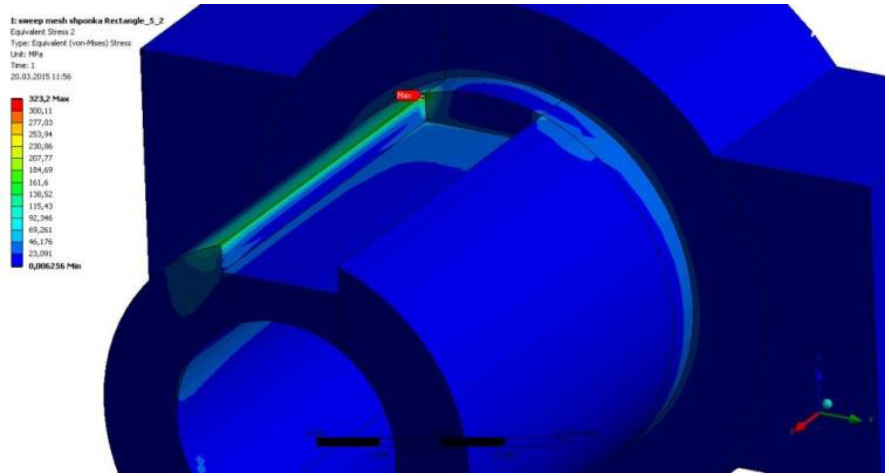

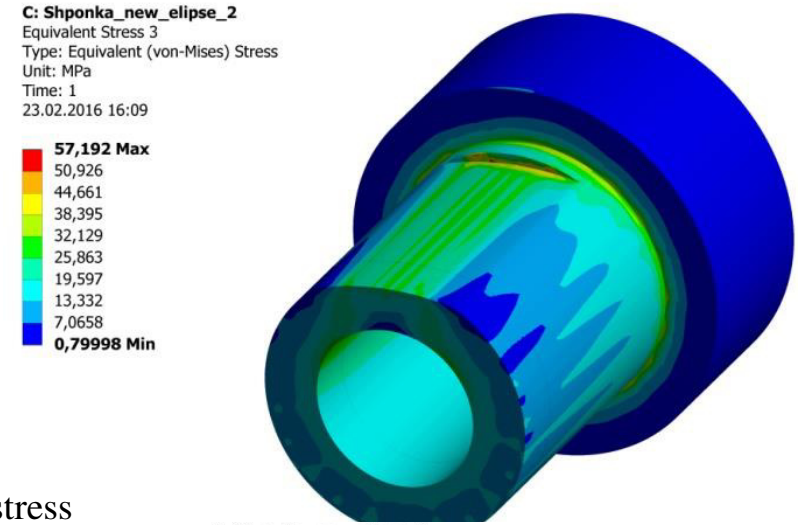

Misses total equivalent stress
of the shaft:
usaul - 323,2 MPa,
new - 57,1 MPa

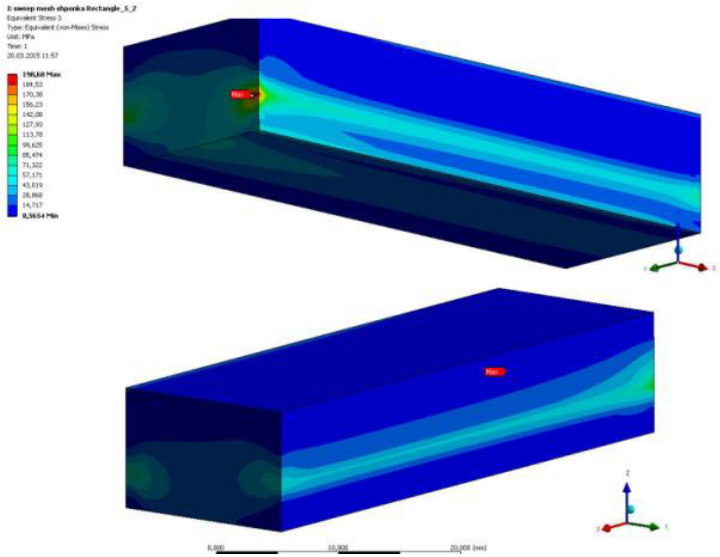

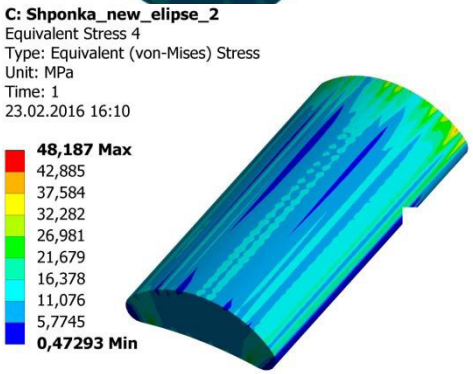

Misses total equivalent
stress of the key:
usaul - 190,68 MPa,
new - 48,1 MPa

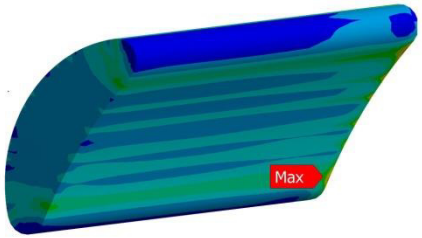

COMPARISON OF OBTAINED RESULTS
VARIANT 2

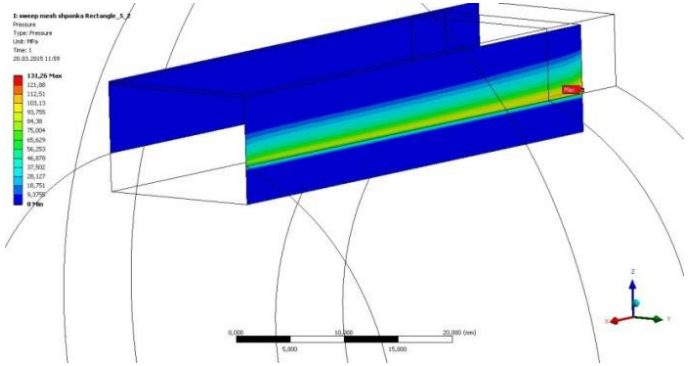

The contact pressure
on the key:
usaul - 131,26 MPa,
new - 96,9 MPa

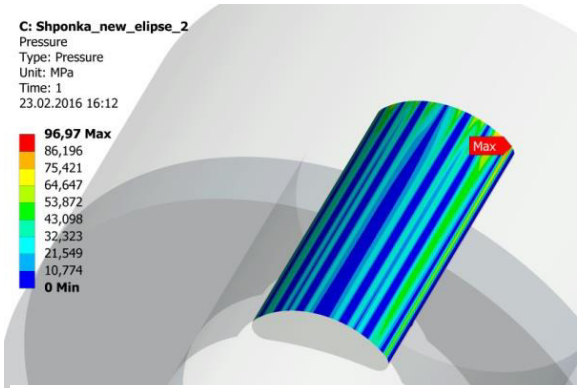

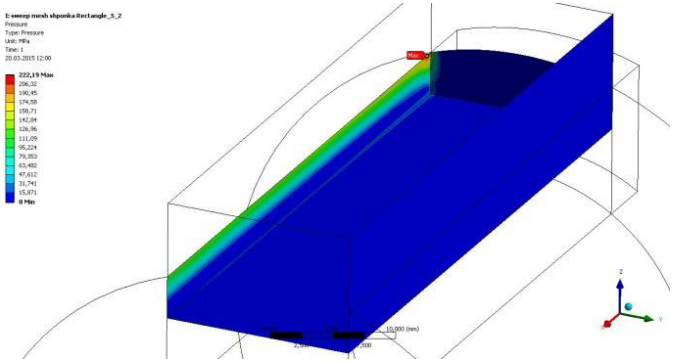

The contact pressure
on the shaft:
usaul - 222,19 MPa,
new - 94,04 MPa

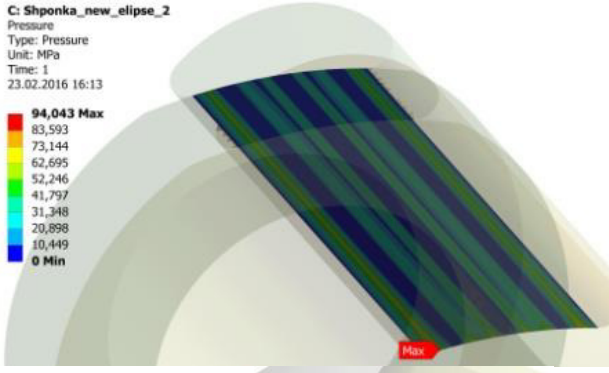

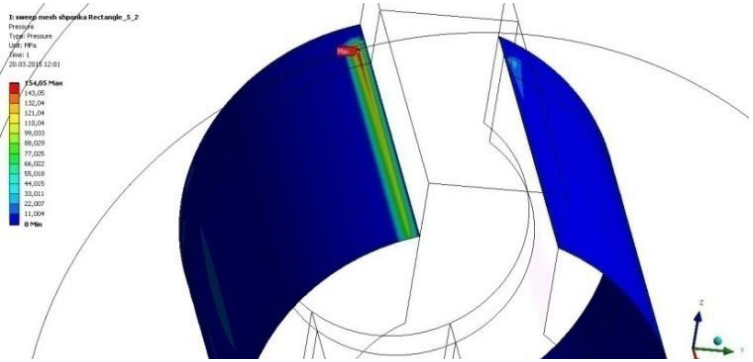

The contact pressure
on the gear:
usaul -154,05 MPa,
new - 27,4 MPa

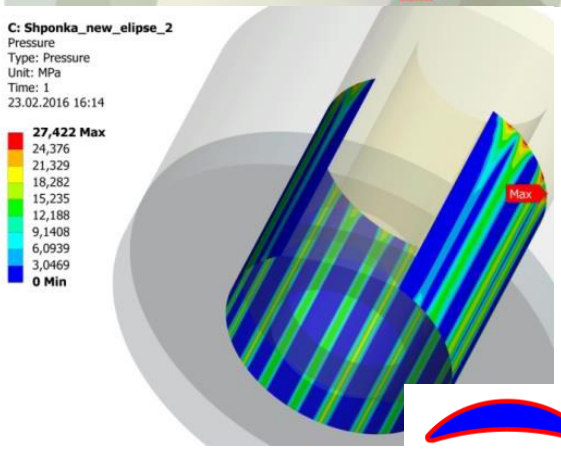

COMPARISON OF OBTAINED RESULTS
VARIANT 2

Continuous shaft

Comparative tables of key joint indicators

Figures	Standard	New	Coefficient of reduction
Displacement, mm:			
Whole model	**0,037**	**0,035**	**1,05**
Gear	**0,037**	**0,035**	**1,05**
Shaft	**0,007**	**0,007**	**1,00**
Key	**0,029**	**0,017**	**1,70**
Von Mises stress, MPa:			
Whole model	**237,89**	**62,00**	**3,83**
Gear	**89,54**	**26,90**	**3,32**
Shaft	**237,89**	**51,26**	**4,64**
Key	**140,84**	**62,20**	**2,26**

COMPARISON OF OBTAINED RESULTS
VARIANT 2

Hollow shaft

Figures	Standard	New	Coefficient of reduction
Displacement, mm:			
Whole model	**0,050**	**0,015**	**3,33**
Gear	**0,050**	**0,015**	**3,33**
Shaft	**0,010**	**0,006**	**1,66**
Key	**0,037**	**0,0096**	**3,85**
Von Mises stress, MPa:			
Whole model	**323,20**	**57,10**	**5,66**
Gear	**87,68**	**25,60**	**3,42**
Shaft	**323,20**	**57,10**	**5,66**
Key	**190,68**	**48,10**	**3,96**
Contact pressure, MPa:			
Gear	**154,05**	**27,40**	**5,62**
Shaft	**222,19**	**94,40**	**2,34**
Key	**131,26**	**96,90**	**1,35**

ADVANTAGES OF THE "TSENTSYPER'S KEY JOINT"

1. There is **no need to have in the hub the external member as such**. The length of the keys is enough to take of, for example: the length of the gear tooth, the rim width of the connecting half-coupling, the pulley width of the plane or belt transmission or linear dimension of any other element that transmits the specified torque. As a result it's reduced overall width of the external member and the total length of the shaft and, therefore, significantly reduced metal consumption.
2. **No shearing and bending strain**. The key during torque transmission undergoes a compressive strain. It is well known that the compressive strain has the maximum permissible stress. It made possible to achieve the following indices: the weakening of the shaft section depending on its nominal size (from smallest to largest) is reduced by 2.9 - 3.1 times; the reducing of the design diameter of the shaft or with the same diameter a greater torque transmission.
3. Application of key joint in **hollow shafts** in principle simplifies to their **design**.
4. With activating of the key joint (torque transmission), and at its stop the key, the shoulder on the shaft and the diametric recess in the external member take load (**without shock loads**) relatively quiet.
5. Key shoulder on the shaft and the diametric recess in the port of the external member practically **do not develop the domestic stress concentrations**.
6. Procedure on the shaft of diametric shoulder and of diametric recess in the external member **greatly simplifies the details manufacturing technology**.
7. The undeniable advantage is the fact that the manufacture of all key joint (in the system of "fits and tolerances") comes with **diametrical sizes**.
8. In general, the use of the new key joint in one connection joint mechanism (with account for less attenuation of the shaft, reduction of the shaft length as a result **the hub absence in external member**) allows, by roughest estimates, **reduce the metal consumption of the connection joint by 7-18%**.

Read more:
tsentsypers-key-joint.web4ed.org

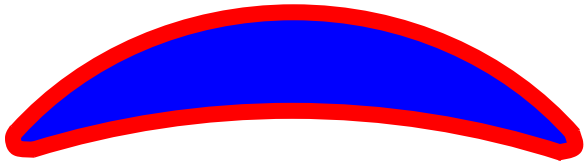

Emblem

NOTE. **It is suggested to insert this emblem on reduction gears, transmission gears, in general on all mechanisms where new key joint is applied.**

Contacts

- The copyright for the invention protected by patent No. 105872 of June 25, 2014

- **For the acquisition of the invention, please contact the author & owner: Adolf Tsentsyper**
  Phone: +380 (68) 961-86-55
  Mail: tsentsiper.a@gmail.com

- Learn More: tsentsypers-key-joint.web4ed.org